-STREETS-

Detail #

3000	Vertical Curb, Gutter and Sidewalk
3010	Low-Profile Curb, Gutter and Sidewalk
3020	Rolled Curb, Gutter and Sidewalk
3030	Separated Sidewalk, Curb & Gutter
3040	Sidewalk Staged Construction
3050	Curb, Gutter, and Sidewalk Details
3060	Valley Gutters
3070	Residential Driveway, Vertical Curb
3080	Residential Driveway, Conventional Vertical Curb
3090	Residential Driveway, Separated Sidewalk
3100	Commercial Driveway
3110	Commercial Driveway With Restricted R/W
3120	Industrial Driveway
3130	Street Replacement at Driveway or Curb and Gutter
3140	Curb Ramp (Type 1), Residential Street
3150	Curb Ramp (Type 2), Residential and Collector Street
3160	Curb Ramp (Type 3), Arterial and Collector Street
3170	Curb Ramp (Type 4 and 5), Mid-block Ramp
3180	Separated Sidewalk Curb Ramp (Type 6), Residential and Collector Street
3190	Alley Sections, Type 1 and 2 New & Existing Right-of-Way
3200	Alley Apron
3210	Street Survey Monument
3220	Street Sign
3230	Median Signs With “Break-Away”
3240	Street Name Sign
3250	Sidewalk Barricade
3260	End of Street Barricade
3270	Street Transition Sign and Barricade
3280	Trench Backfill For City Utilities Within Paved Area
3290	Trench Backfill For City Utilities In Unpaved Areas
3300	Utility Trench For Non-City Utilities
3310	Pavement Digout Repair
3320	PVC & Concrete Filled Steel Pipe Bollard
3330	Access Gate
3340	Median Island

-MANHOLES

Detail #

4000 Manhole Frame & Cover
4010 Manhole For Pipes Less Than 24”
4020 Manhole For Pipes 24” To 48” Diameter
4030 Saddle Manhole For Pipes 48” Dia. Or Larger
4040 Manhole Plug For Future Pipe
4050 Unimproved Area Manhole Frame & Bollards

-STORM DRAIN-

4500 Storm Drain Manhole Installation In Sidewalk
4510 Storm Drain Curb Inlet Type A, Pipes < 24”
4520 Storm Drain Curb Inlet Type A, Pipes ≥ 24”
4530 Storm Drain Curb Inlet Type B, Pipes < 24”
4540 Storm Drain Curb Inlet Type B, Pipes ≥ 24”
4550 “No Dumping” Curb Inlet Stamp
4560 Curb Inlet, Type A
4570 Curb Inlet, Type B
4580 Under Sidewalk Drain
4590 Field Inlets
4600 Field Inlet

Detail #

W-1 Trench Details for Polyvinyl Chloride Pipe (PVC)
W-2 Water-Sewer Separation Detail
W-3 Fitting and Thrust Blocks for Horizontal Bends
W-4 Fitting and Thrust Blocks for Vertical Downward Bends
W-5 Fitting and Thrust Blocks for Vertical Upward Bends
W-6 “Cut-In” Tee or Cross Detail for Lateral Connection
W-7 Fire Hydrant Detail
W-8 Fire Hydrant Installation for Developed Areas
W-9 Fire Hydrant Installation for Undeveloped Areas
W-10 Traffic Box and Valve Details
W-11 3/4"-1" Meter Connection
W-12 3/4"-1" Double Meter Connection
W-13 1-1/2"-2" Meter Connection
W-14 3/4"-1" Meter Connection With Sampling Station
W-15 Blow-Off Assemblies
W-16 Air & Vacuum Valve Assembly
W-17 3/4"-2" Reduced Pressure Backflow Preventer Installation
W-18 Reduced Pressure Backflow Preventor Protective Enclosure
W-19 3" - 10" Reduced Pressure Backflow Preventer Installation
W-20 Double Check Detector Assembly Installation
W-21 Residential Fire Sprinkler Service Installation
W-22 Water and Non-Potable Pipeline Separation Detail

-SANITARY SEWER-

6000 Outside Sanitary Sewer Drop Manhole
6010 Inside Sanitary Sewer Drop Manhole
6020 Sewer Lateral Cleanout.
6030 Sewer Service Lateral
6040 Tap-Tite Sewer Fittings

-STREET LIGHTING-

7000 Street Light Pole Installation
7010 Street Light Foundation Cast-in-Place
7020 Street Light Pole-to-Base Attachment
7030 Street Light Pole Specifications
7040 Street Light Box and Conduit Installation
7050 Standard Street Light Numbering
7060 Exposed Aggregate Pole Top Path Light
7070 Fluted Pole Top Path Light
7080 Fluted Pole Top Path Light Base Detail

-IRRIGATION AND LANDSCAPING-

8000 Tree Planting
8010 Shrub Planting
8020 Irrigation Controller
8030 Remote Control And Ball Valve Combination
8040 Irrigation Drip Filtering System
8050 Quick Coupler
8060 Typical Spray Head
8070 Irrigation Box Arrangement
8080 Typical Bubbler
8090 Drip Irrigation Flush Plug
8100 Drip Emitter Arrangement
8110 Underground Wire Splice
8120 Drip Irrigation Multi-Outlet Emitter

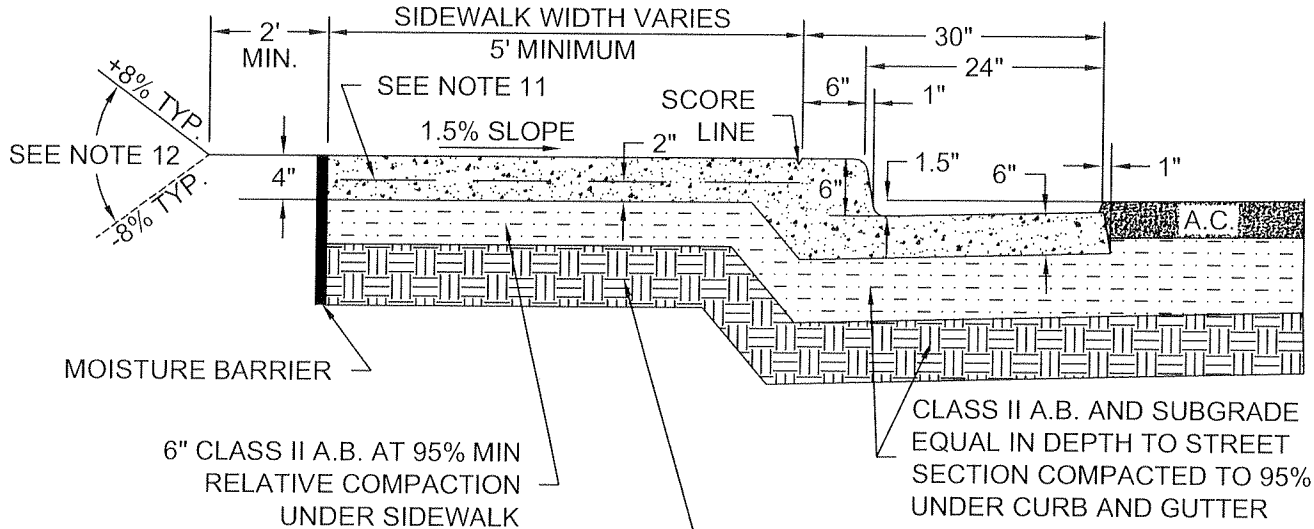

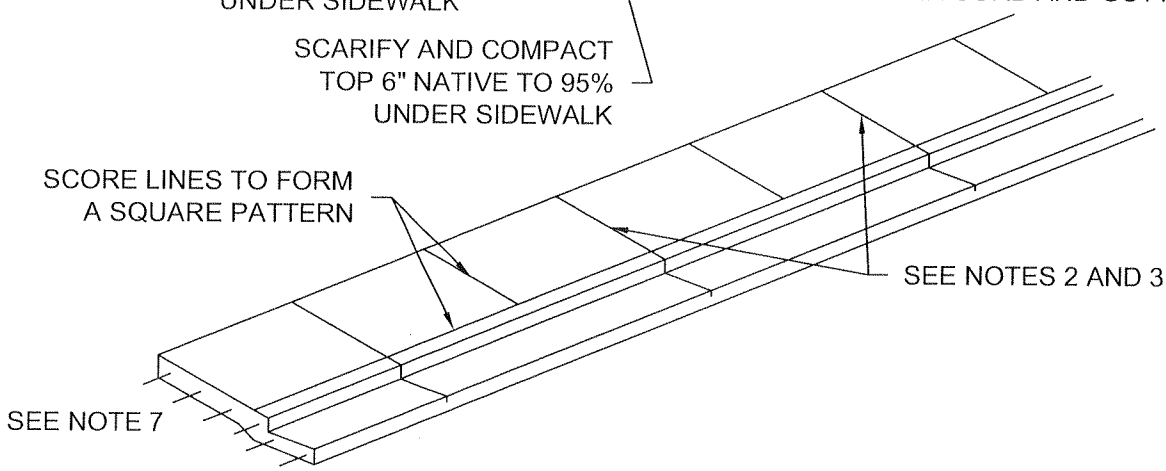

NOTES:

1. USE CITY STANDARD CONCRETE.
2. SCORE LINES SHALL BE $\frac{1}{2}$" DEEP AND FORM A SQUARE.
3. WEAKENED PLANE JOINTS SHALL BE $1\frac{1}{4}$" DEEP AND INSTALLED AT 12' MAX INTERVALS TO MATCH SCORE LINES.
4. PLACE EXPANSION JOINTS AT CURB RETURNS, TRANSITIONS TO DRAIN INLETS, AND DRIVEWAYS AND 60' INTERVALS.
5. APPLY "FINE BROOM" FINISH TO SIDEWALK PERPENDICULAR TO STREET; APPLY "FINE BROOM" FINISH TO CURB AND GUTTER PARALLEL TO STREET.
6. NEW SIDEWALK, CURB AND GUTTER SHALL BE MONOLITHICALLY POURED.
7. EXISTING CONCRETE TO BE MATCHED SHALL BE DRILLED AND DOWELED WITH 8" LONG, #4 REBAR AT 12" MAXIMUM ON CENTER.
8. ALL CORNERS SHALL HAVE $\frac{1}{2}$" TOOLED RADIUS.
9. FOR CURB TYPE TRANSITION DETAILS AND WEAKENED PLANE JOINT DETAIL SEE DETAIL 3050.
10. FOR CURB AND GUTTER TRANSITION DETAILS AT CURB INLETS, SEE DETAIL 4090 AND 4100.
11. 6"x6"x10 GAUGE WIRE REINFORCEMENT REQUIRED FOR ALL SIDEWALKS.
12. A MAXIMUM SLOPE GRADE OF 5:1 WILL BE ALLOWED AT STREET LANDSCAPING APPLICATIONS WHERE APPROVED BY THE CITY ENGINEER.
13. SIDEWALK REPLACEMENT IN EXISTING NEIGHBORHOOD SHALL BE SCORED TO MATCH EXISTING, SUBJECT TO THE APPROVAL OF THE CITY ENGINEER.

DIXON CALIFORNIA CITY OF DIXON ENGINEERING STANDARD DETAIL	REGISTERED PROFESSIONAL ENGINEER C. W. CUNNINGHAM No. C061985 EXP. 03/31/10 CIVIL STATE OF CALIFORNIA APPROVED: NOVEMBER 2009	VERTICAL CURB, GUTTER & SIDEWALK	3000

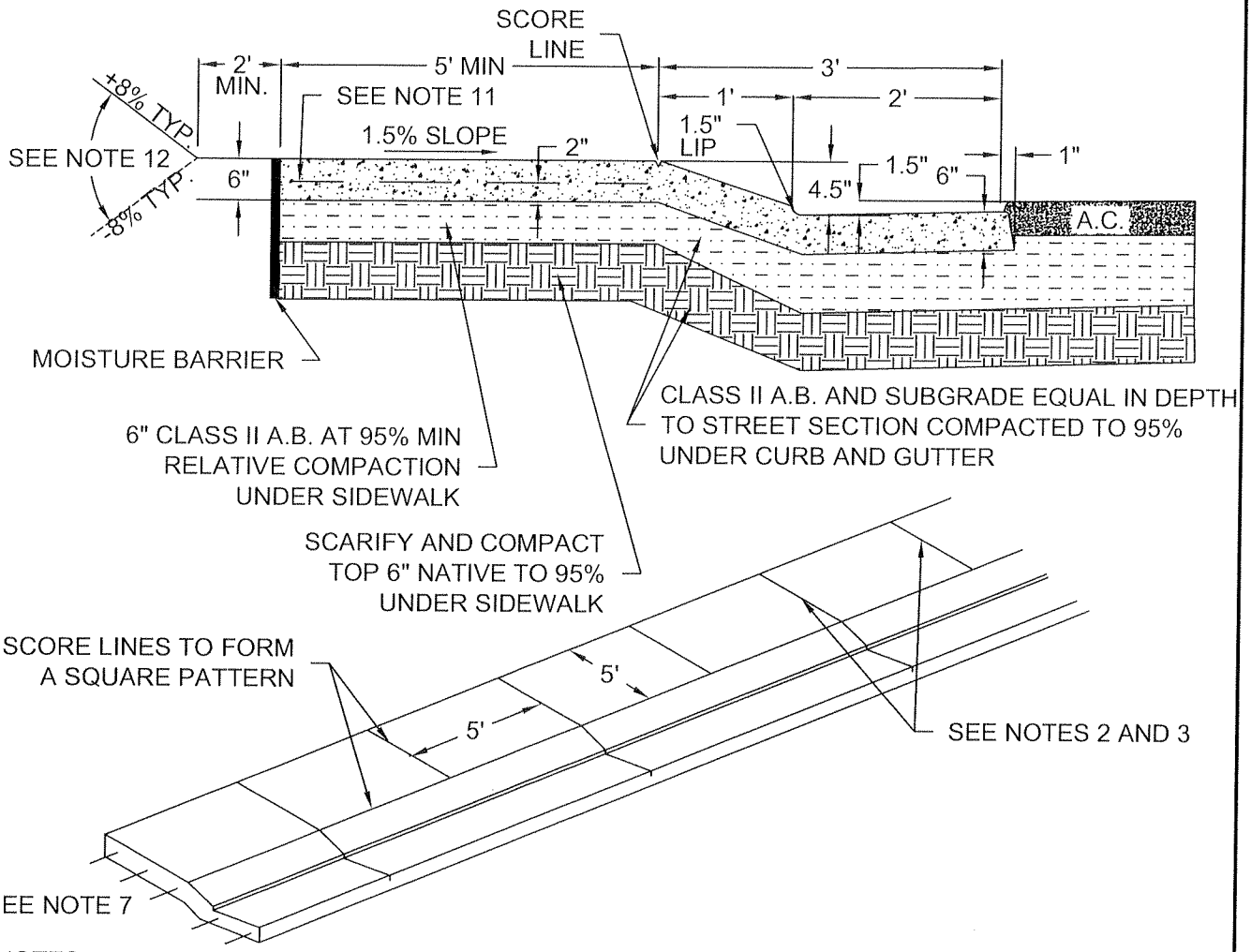

NOTES:

1. USE CITY STANDARD CONCRETE.
2. SCORE LINES SHALL BE $\frac{1}{2}$" DEEP AND FORM A SQUARE.
3. WEAKENED PLANE JOINTS SHALL BE $1\frac{1}{4}$" DEEP AND INSTALLED AT 12' MAX INTERVALS TO MATCH SCORE LINES.
4. PLACE EXPANSION JOINTS AT CURB RETURNS, TRANSITIONS TO DRAIN INLETS, AND DRIVEWAYS AND 60' INTERVALS.
5. APPLY "FINE BROOM" FINISH TO SIDEWALK PERPENDICULAR TO STREET; APPLY "FINE BROOM" FINISH TO CURB AND GUTTER PARALLEL TO STREET.
6. NEW SIDEWALK, CURB AND GUTTER SHALL BE MONOLITHICALLY POURED.
7. EXISTING CONCRETE TO BE MATCHED SHALL BE DRILLED AND DOWELED WITH 8" LONG, #4 REBAR AT 12" MAXIMUM ON CENTER.
8. ALL CORNERS SHALL HAVE $\frac{1}{2}$" TOOLED RADIUS.
9. FOR CURB TYPE TRANSITION DETAILS AND WEAKENED PLANE JOINT DETAIL SEE DETAIL 3050.
10. FOR CURB AND GUTTER TRANSITION DETAILS AT CURB INLETS, SEE DETAIL 4090 AND 4100.
11. 6"x6"x10 GAUGE WIRE REINFORCEMENT REQUIRED FOR ALL SIDEWALKS.
12. A MAXIMUM SLOPE GRADE OF 5:1 WILL BE ALLOWED AT STREET LANDSCAPING APPLICATIONS WHERE APPROVED BY THE CITY ENGINEER.
13. SIDEWALK REPLACEMENT IN EXISTING NEIGHBORHOOD SHALL BE SCORED TO MATCH EXISTING, SUBJECT TO THE APPROVAL OF THE CITY ENGINEER.

3010	LOW-PROFILE CURB GUTTER & SIDEWALK	REGISTERED PROFESSIONAL ENGINEER ... W. CUNNINGHAM No. C041985 EXP. 03/31/10 CIVIL STATE OF CALIFORNIA APPROVED: NOVEMBER 2009	CITY OF DIXON ENGINEERING STANDARD DETAIL DIXON CALIFORNIA

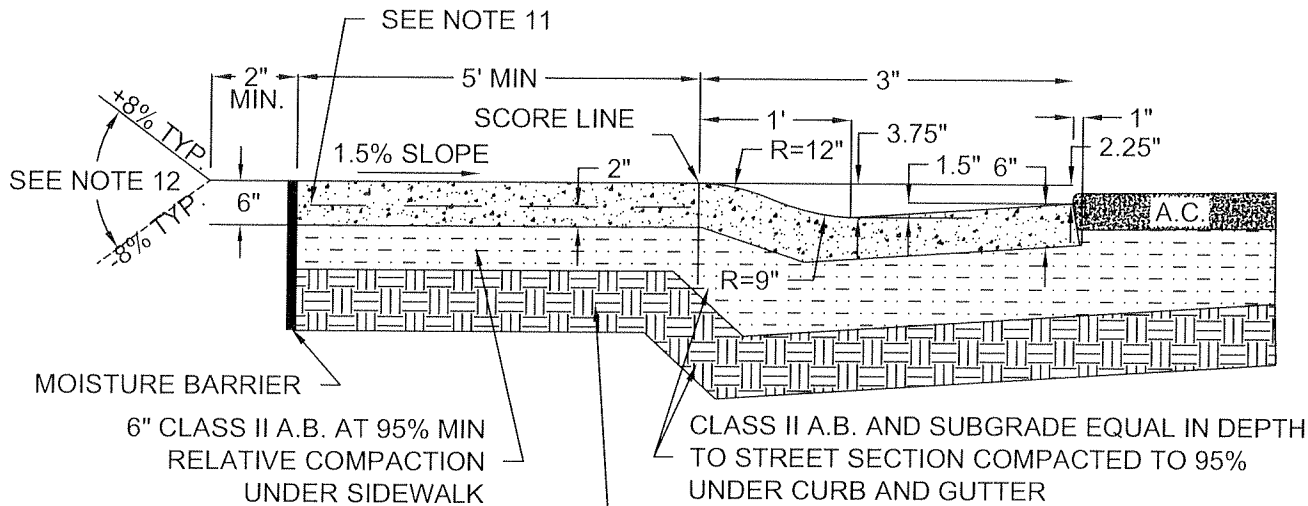

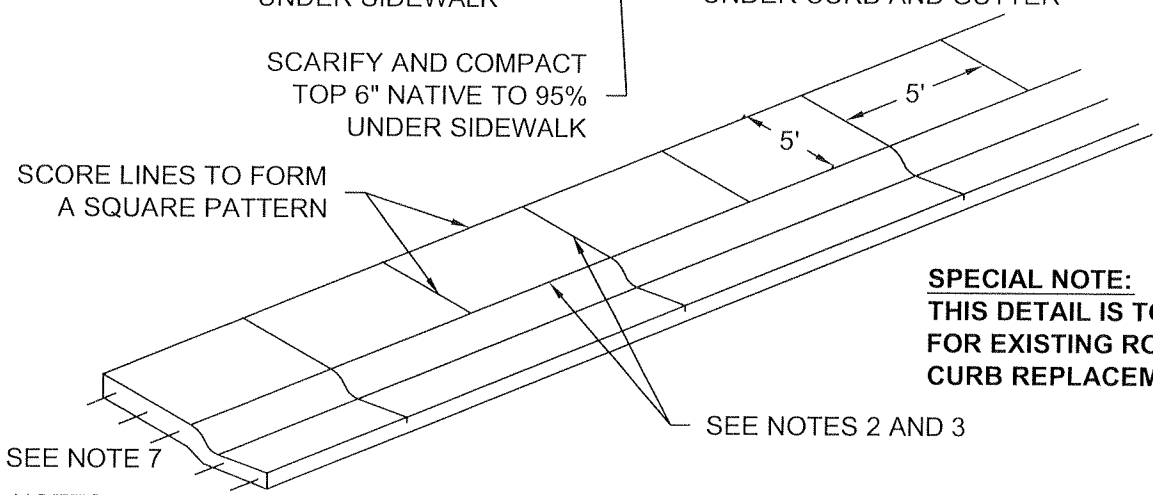

SPECIAL NOTE:
THIS DETAIL IS TO BE USED FOR EXISTING ROLLED CURB REPLACEMENT ONLY.

NOTES:

1. USE CITY STANDARD CONCRETE.
2. SCORE LINES SHALL BE $\frac{1}{2}$" DEEP AND FORM A SQUARE.
3. WEAKENED PLANE JOINTS SHALL BE $1\frac{1}{4}$" DEEP AND INSTALLED AT 12' MAX INTERVALS TO MATCH SCORE LINES.
4. PLACE EXPANSION JOINTS AT CURB RETURNS, TRANSITIONS TO DRAIN INLETS, AND DRIVEWAYS AND 60' INTERVALS.
5. APPLY "FINE BROOM" FINISH TO SIDEWALK PERPENDICULAR TO STREET; APPLY "FINE BROOM" FINISH TO CURB AND GUTTER PARALLEL TO STREET.
6. NEW SIDEWALK, CURB AND GUTTER SHALL BE MONOLITHICALLY POURED.
7. EXISTING CONCRETE TO BE MATCHED SHALL BE DRILLED AND DOWELED WITH 8" LONG, #4 REBAR AT 12" MAXIMUM ON CENTER.
8. ALL CORNERS SHALL HAVE $\frac{1}{2}$" TOOLED RADIUS.
9. FOR CURB TYPE TRANSITION DETAILS AND WEAKENED PLANE JOINT DETAIL SEE DETAIL 3050.
10. FOR CURB AND GUTTER TRANSITION DETAILS AT CURB INLETS, SEE DETAIL 4090 AND 4100.
11. 6"x6"x10 GAUGE WIRE REINFORCEMENT REQUIRED FOR ALL SIDEWALKS.
12. A MAXIMUM SLOPE GRADE OF 5:1 WILL BE ALLOWED AT STREET LANDSCAPING APPLICATIONS WHERE APPROVED BY THE CITY ENGINEER.
13. SIDEWALK REPLACEMENT IN EXISTING NEIGHBORHOOD SHALL BE SCORED TO MATCH EXISTING, SUBJECT TO THE APPROVAL OF THE CITY ENGINEER.

DIXON CALIFORNIA — CITY OF DIXON ENGINEERING STANDARD DETAIL	REGISTERED PROFESSIONAL ENGINEER — No. C011983 — EXP. 03/31/10 — CIVIL — STATE OF CALIFORNIA APPROVED: NOVEMBER 2009	ROLLED CURB, GUTTER & SIDEWALK	3020

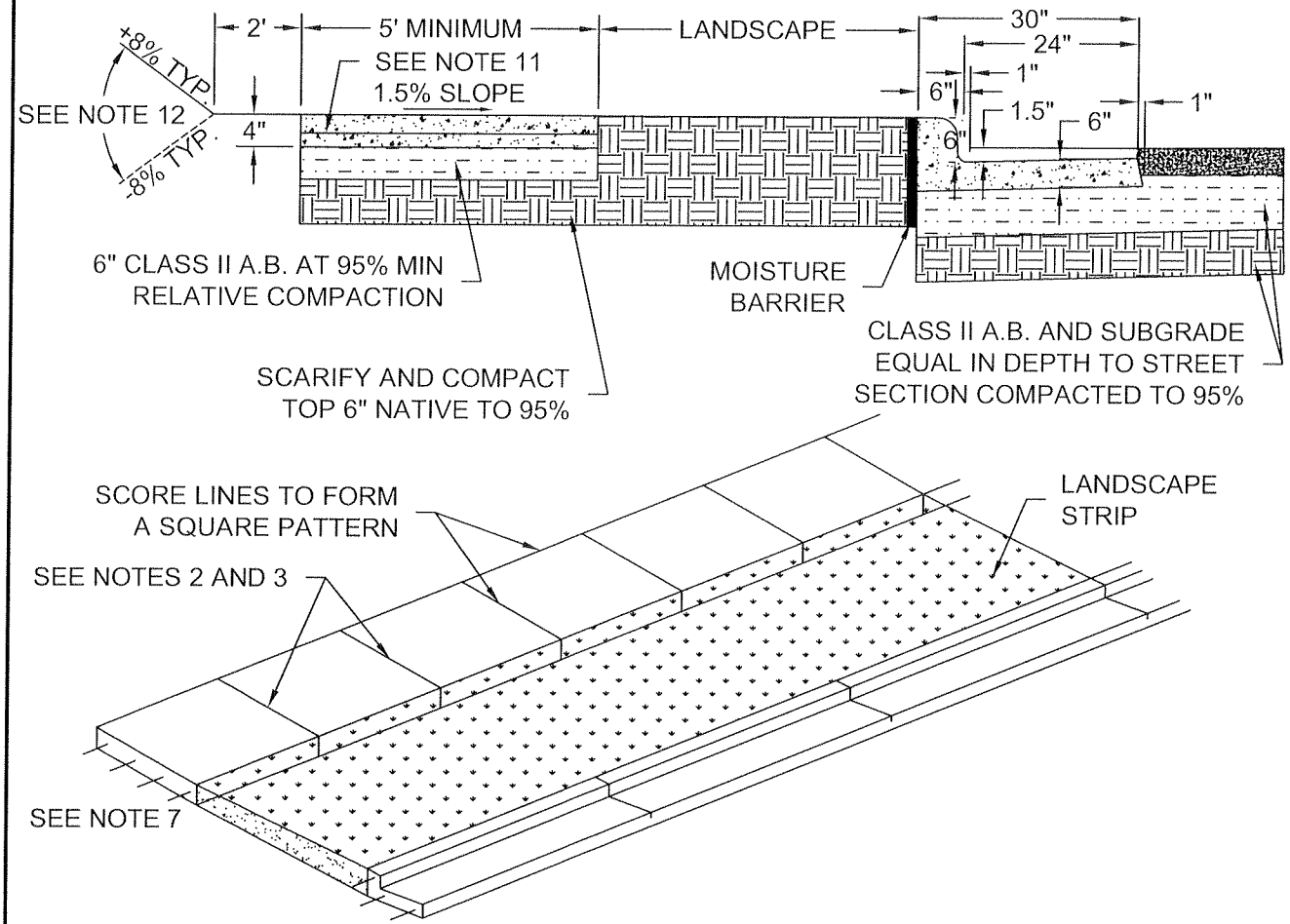

NOTES:

1. USE CITY STANDARD CONCRETE.
2. SCORE LINES SHALL BE $\frac{1}{2}$" DEEP AND FORM A SQUARE.
3. WEAKENED PLANE JOINTS SHALL BE $1\frac{1}{4}$" DEEP AND INSTALLED AT 12' MAX INTERVALS TO MATCH SCORE LINES.
4. PLACE EXPANSION JOINTS AT CURB RETURNS, TRANSITIONS TO DRAIN INLETS, AND DRIVEWAYS AND 60' INTERVALS.
5. APPLY "FINE BROOM" FINISH TO SIDEWALK PERPENDICULAR TO STREET; APPLY "FINE BROOM" FINISH TO CURB AND GUTTER PARALLEL TO STREET.
6. NEW SIDEWALK, CURB AND GUTTER SHALL BE MONOLITHICALLY POURED.
7. EXISTING CONCRETE TO BE MATCHED SHALL BE DRILLED AND DOWELED WITH 8" LONG, #4 REBAR AT 12" MAXIMUM ON CENTER.
8. ALL CORNERS SHALL HAVE $\frac{1}{2}$" TOOLED RADIUS.
9. FOR CURB TYPE TRANSITION DETAILS AND WEAKENED PLANE JOINT DETAIL SEE DETAIL 3050.
10. FOR CURB AND GUTTER TRANSITION DETAILS AT CURB INLETS, SEE DETAIL 4090 AND 4100.
11. 6"x6"x10 GAUGE WIRE REINFORCEMENT REQUIRED FOR ALL SIDEWALKS.
12. A MAXIMUM SLOPE GRADE OF 5:1 WILL BE ALLOWED AT STREET LANDSCAPING APPLICATIONS WHERE APPROVED BY THE CITY ENGINEER.
13. SIDEWALK REPLACEMENT IN EXISTING NEIGHBORHOOD SHALL BE SCORED TO MATCH EXISTING, SUBJECT TO THE APPROVAL OF THE CITY ENGINEER.

3030	SEPARATED SIDEWALK, CURB & GUTTER	REGISTERED PROFESSIONAL ENGINEER JOYCE W. CUNNINGHAM No. C041985 EXP. 03/31/10 CIVIL STATE OF CALIFORNIA APPROVED: NOVEMBER 2009	CITY OF DIXON ENGINEERING STANDARD DETAIL

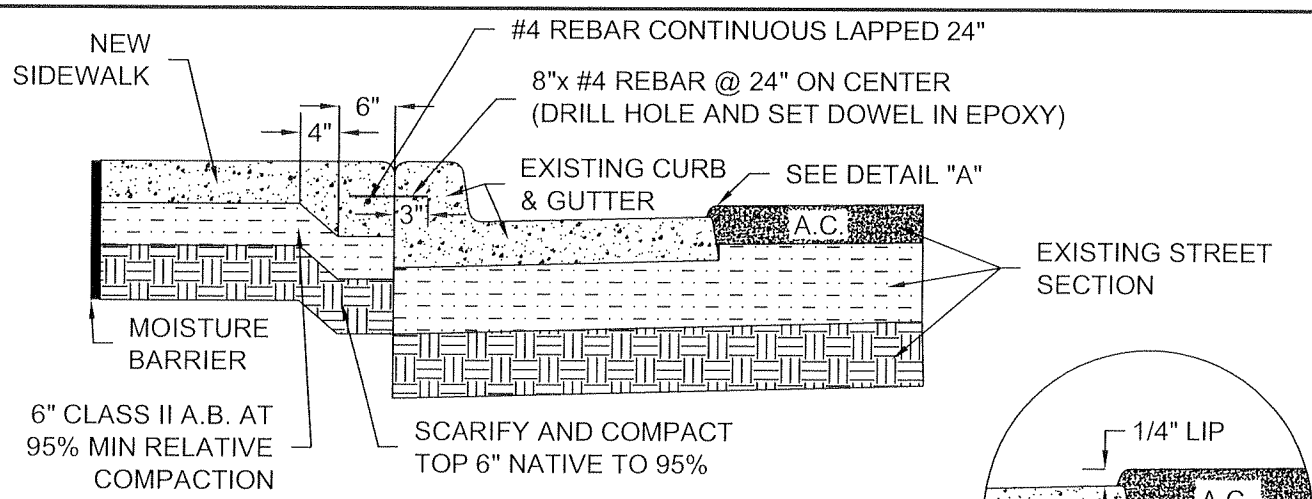

VERTICAL CURB, GUTTER & SIDEWALK

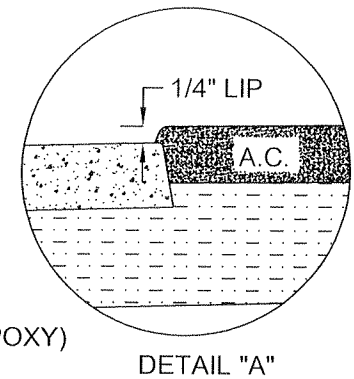

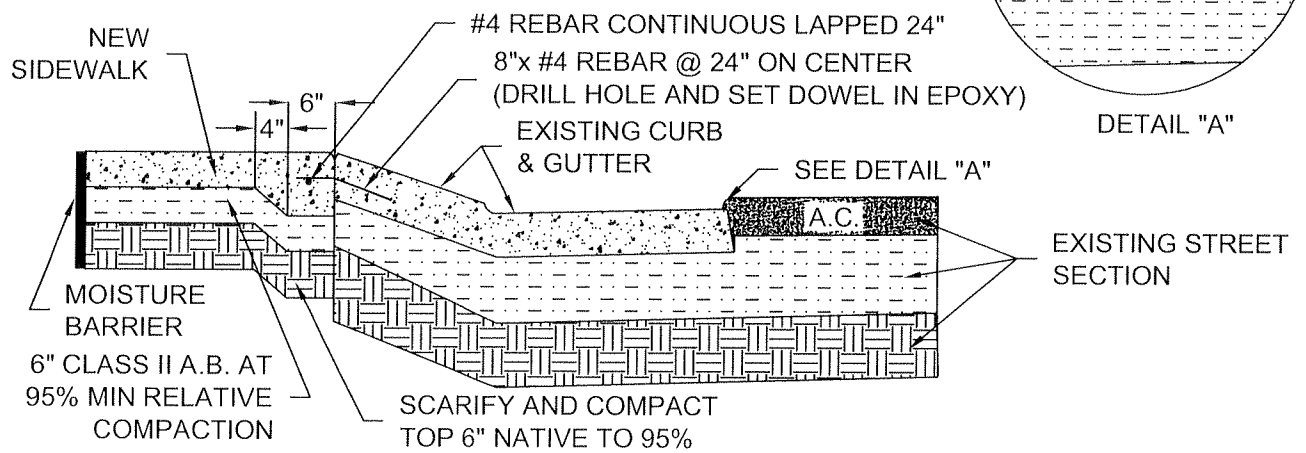

LOW-PROFILE CURB, GUTTER & SIDEWALK

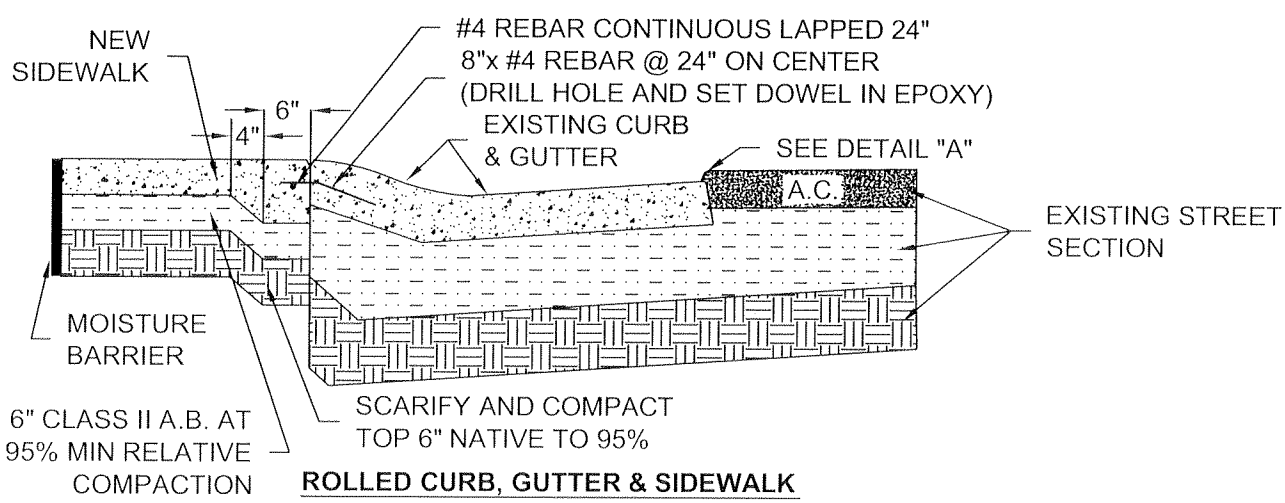

ROLLED CURB, GUTTER & SIDEWALK

NOTES:

1. SEE DETAILS 3000, 3010 AND 3020 FOR SIDEWALK CONSTRUCTION DETAILS.
2. ALL CORNERS SHALL HAVE $\frac{1}{2}$" TOOLED RADIUS.

DIXON CALIFORNIA — CITY OF DIXON ENGINEERING STANDARD DETAIL	REGISTERED PROFESSIONAL ENGINEER — CLAUDE W. CUNNINGHAM — No. C041985 — EXP. 03/31/10 — CIVIL — STATE OF CALIFORNIA APPROVED: NOVEMBER 2009	SIDEWALK STAGED CONSTRUCTION	3040

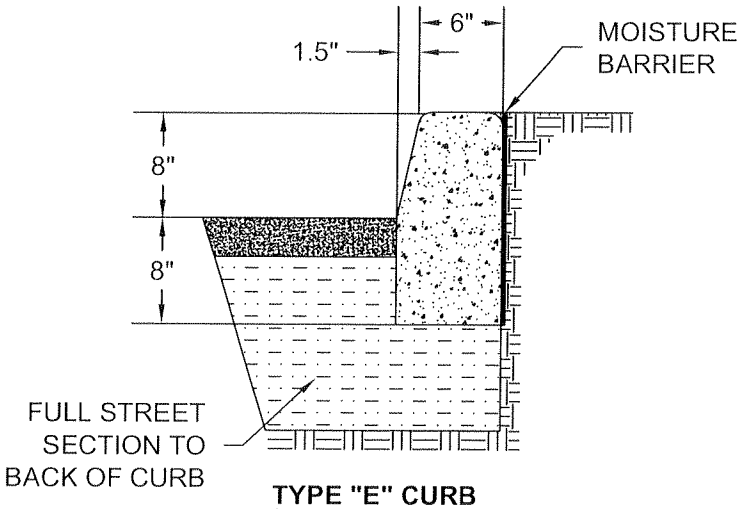

TYPE "E" CURB

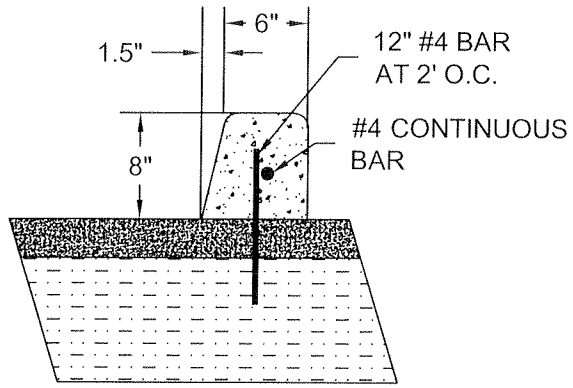

TYPE "F" CURB

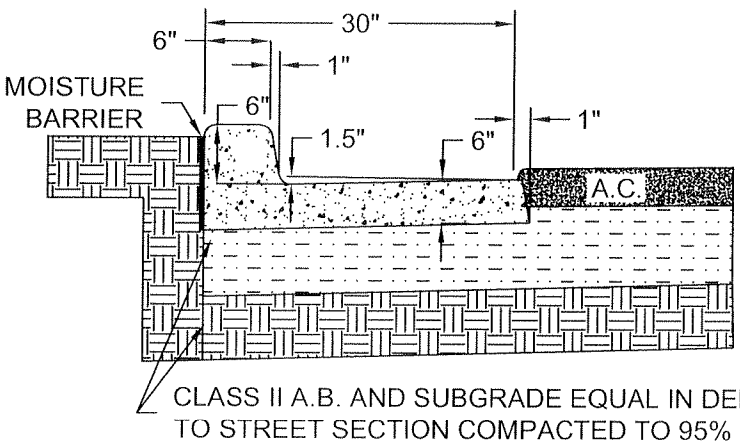

VERTICAL CURB & GUTTER

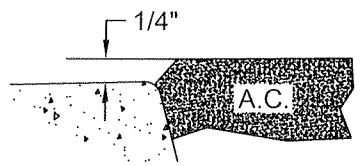

GUTTER LIP DETAIL

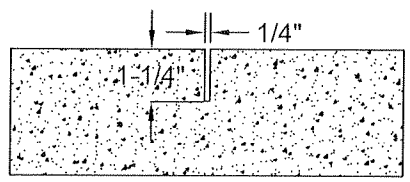

WEAKENED PLANE JOINT
12' MAXIMUM SPACING
(SEE DETAIL 3000 - 3030, NOTE 3)

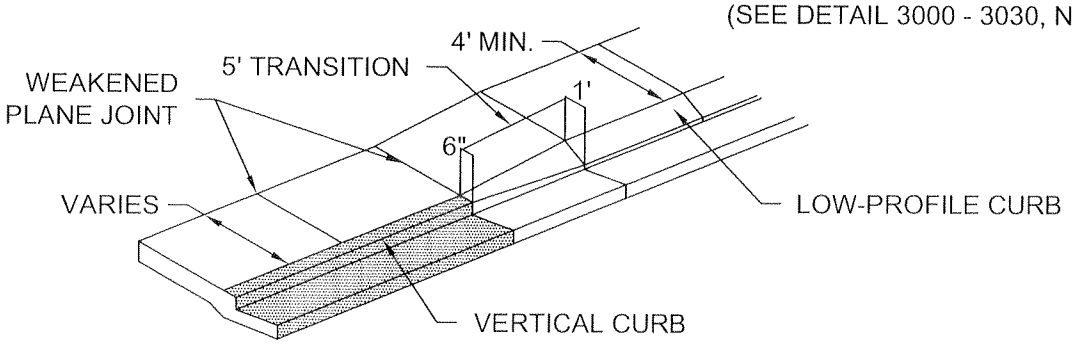

LOW-PROFILE TO VERTICAL CURB & GUTTER TRANSITION DETAIL

NOTES:
1. SEE DETAILS 3000, 3010 AND 3020 FOR SIDEWALK CONSTRUCTION DETAILS.
2. ALL CORNERS SHALL HAVE $\frac{1}{2}$" TOOLED RADIUS.

3050	CURB, GUTTER & SIDEWALK DETAILS	REGISTERED PROFESSIONAL ENGINEER GEORGE W. CUNNINGHAM No. C041985 EXP. 03/31/10 CIVIL STATE OF CALIFORNIA APPROVED: NOVEMBER 2009	CITY OF DIXON ENGINEERING STANDARD DETAIL DIXON CALIFORNIA

RADIUS TABLE	
TYPE	MINIMUM FACE OF CURB RADIUS
INDUSTRIAL	30' MIN
COMMERCIAL	20' MIN
RESIDENTIAL APARTMENTS	20' MIN

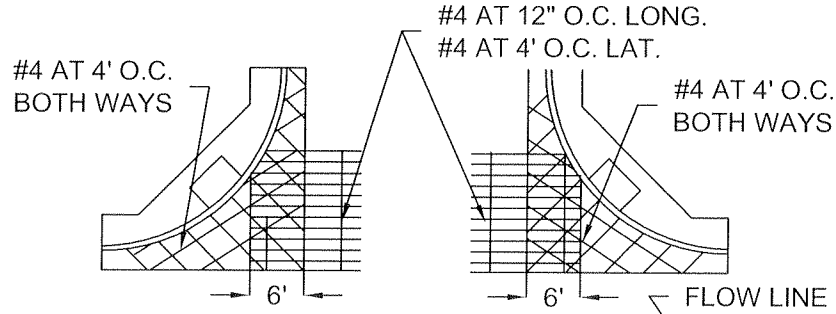

REINFORCEMENT

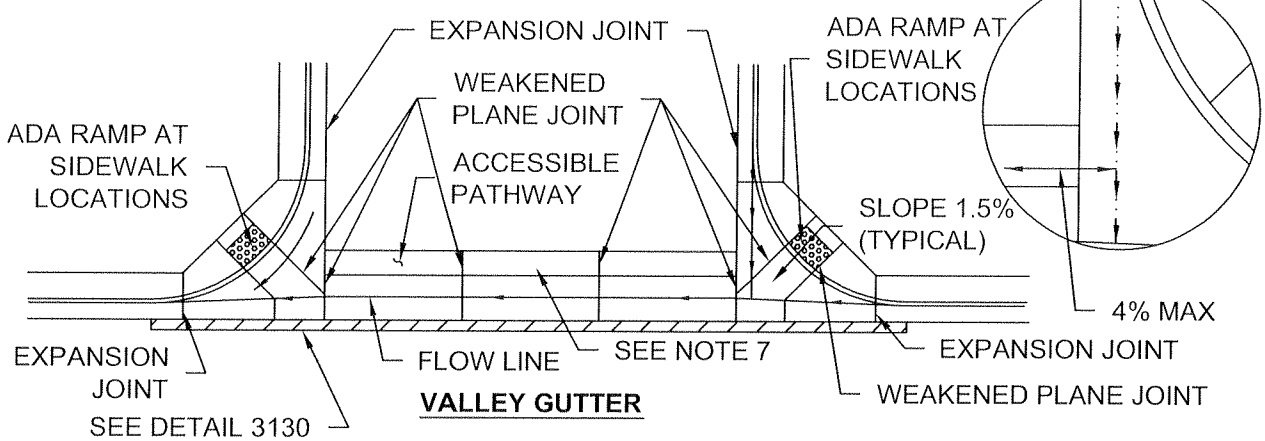

VALLEY GUTTER

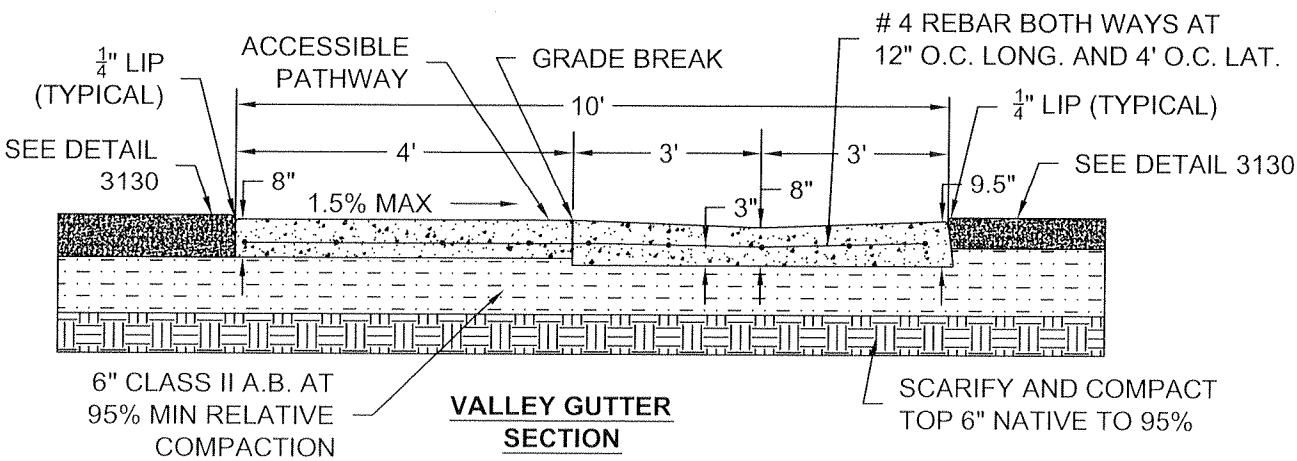

VALLEY GUTTER SECTION

NOTES:

1. MINIMUM LONGITUDINAL SLOPE SHALL BE 0.5%.
2. APPLY "FINE BROOM" FINISH TO SIDEWALK PERPENDICULAR TO STREET; APPLY "FINE BROOM" FINISH TO CURB AND GUTTER PARALLEL TO STREET.
3. ALL CORNERS SHALL HAVE A $\frac{1}{2}$" TOOLED RADIUS.
4. FULL STREET SECTION OR 6", WHICHEVER IS GREATER.
5. USE CITY STANDARD CONCRETE.
6. MINIMUM CONCRETE GUTTER PAN APRON SECTION IS 8".
7. ACCESSIBLE PATHWAY SHALL BE 4' WIDE WITH A MAX. OF 1.5% CROSS SLOPE IN ALL DIRECTIONS AND WITHOUT ABRUPT GRADE CHANGE AT GUTTER FLOW LINE.

DIXON CALIFORNIA — CITY OF DIXON ENGINEERING STANDARD DETAIL	REGISTERED PROFESSIONAL ENGINEER — STEVE W. CUNNINGHAM — No. C041985 — EXP. 03/31/10 — CIVIL — STATE OF CALIFORNIA APPROVED: NOVEMBER 2009	VALLEY GUTTERS	3060

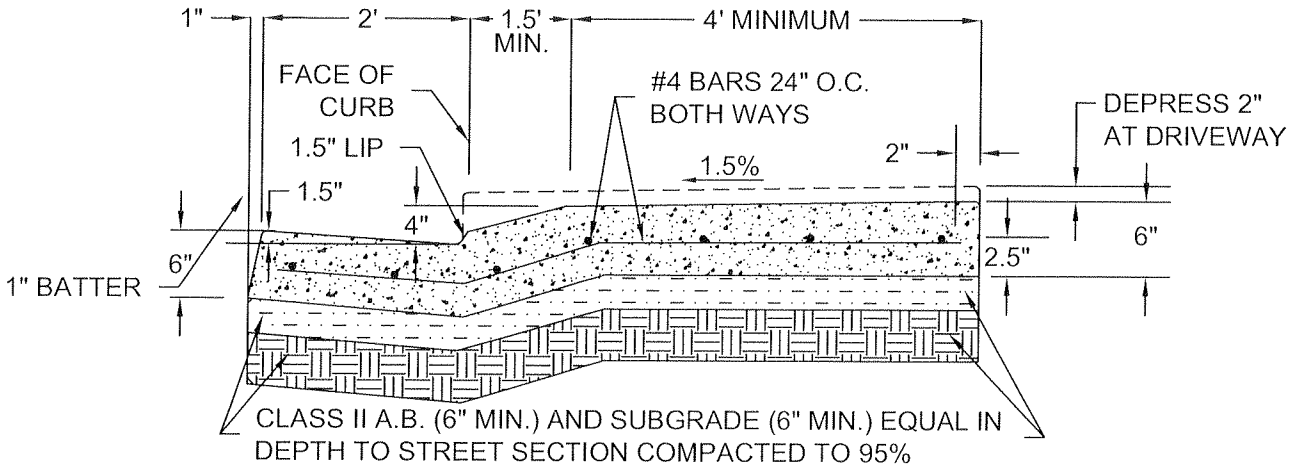

DRIVEWAY SECTION A-A

(SECTION BETWEEN EXPANSION JOINTS ON EACH SIDE OF DRIVEWAY)

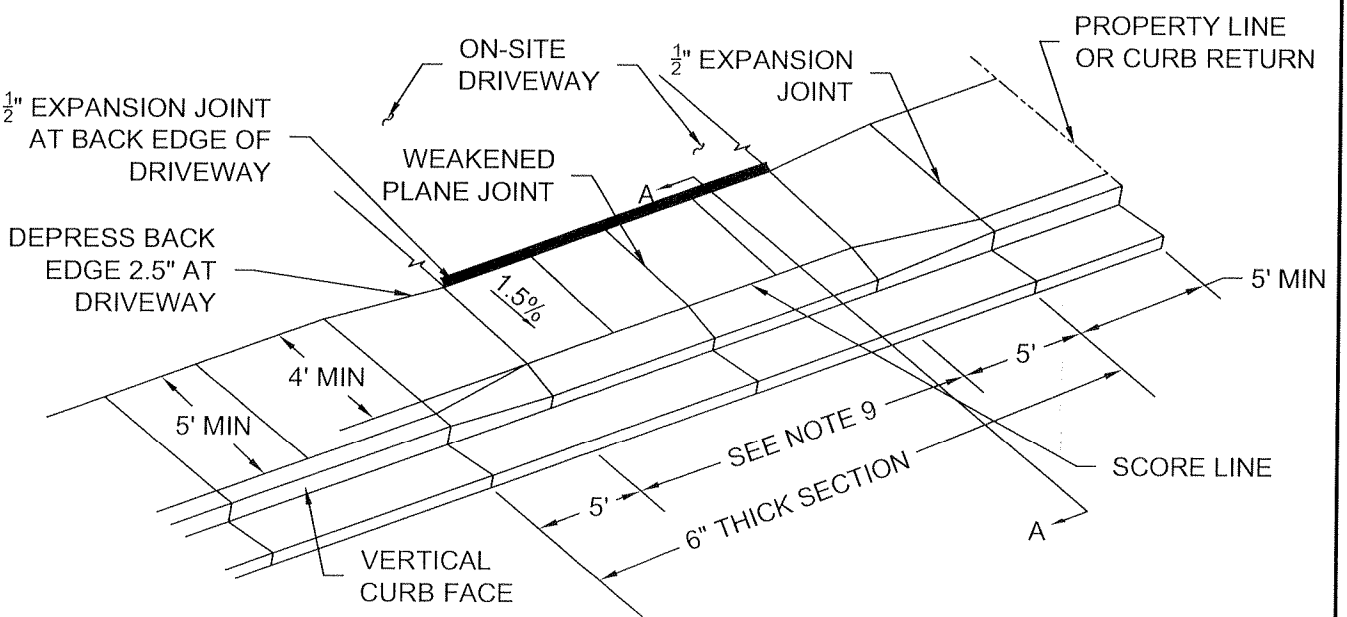

NOTES:

1. USE CITY STANDARD CONCRETE.
2. SCORE LINES SHALL BE ½" DEEP AND FORM A SQUARE.
3. WEAKENED PLANE JOINTS SHALL BE 1¼" DEEP AND INSTALLED AT 12' MAX INTERVALS TO MATCH SCORE LINES.
4. APPLY "FINE BROOM" FINISH TO SIDEWALK PERPENDICULAR TO STREET; APPLY "FINE BROOM" FINISH TO CURB AND GUTTER PARALLEL TO STREET.
5. NEW SIDEWALK, CURB AND GUTTER SHALL BE MONOLITHICALLY POURED.
6. EXISTING CONCRETE TO BE MATCHED SHALL BE DRILLED AND DOWELED WITH 8" LONG, #4 REBAR AT 12" MAXIMUM ON CENTER.
7. IF ADJACENT ASPHALT IS DAMAGED, IT MUST BE REPLACED PER DETAIL 3130.
8. BACK EDGE OF DRIVEWAY SHALL BE DEPRESSED 2.5" BELOW SIDEWALK.
9. MINIMUM RESIDENTIAL DRIVEWAY WIDTH SHALL BE A MINIMUM OF 16' AND MAXIMUM OF 30'.

3070	RESIDENTIAL DRIVEWAY VERTICAL CURB	REGISTERED PROFESSIONAL ENGINEER J. W. CUNNINGHAM No. C041989 EXP. 03/31/10 CIVIL STATE OF CALIFORNIA APPROVED: NOVEMBER 2009	CITY OF DIXON ENGINEERING STANDARD DETAIL DIXON CALIFORNIA

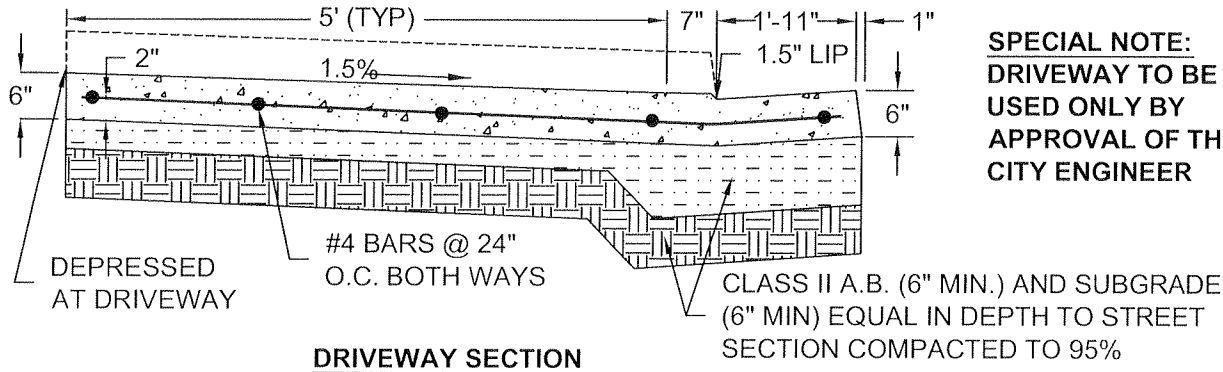

SPECIAL NOTE:
DRIVEWAY TO BE USED ONLY BY APPROVAL OF THE CITY ENGINEER

DRIVEWAY SECTION
(SECTION BETWEEN EXPANSION JOINTS ON EACH SIDE OF DRIVEWAY)

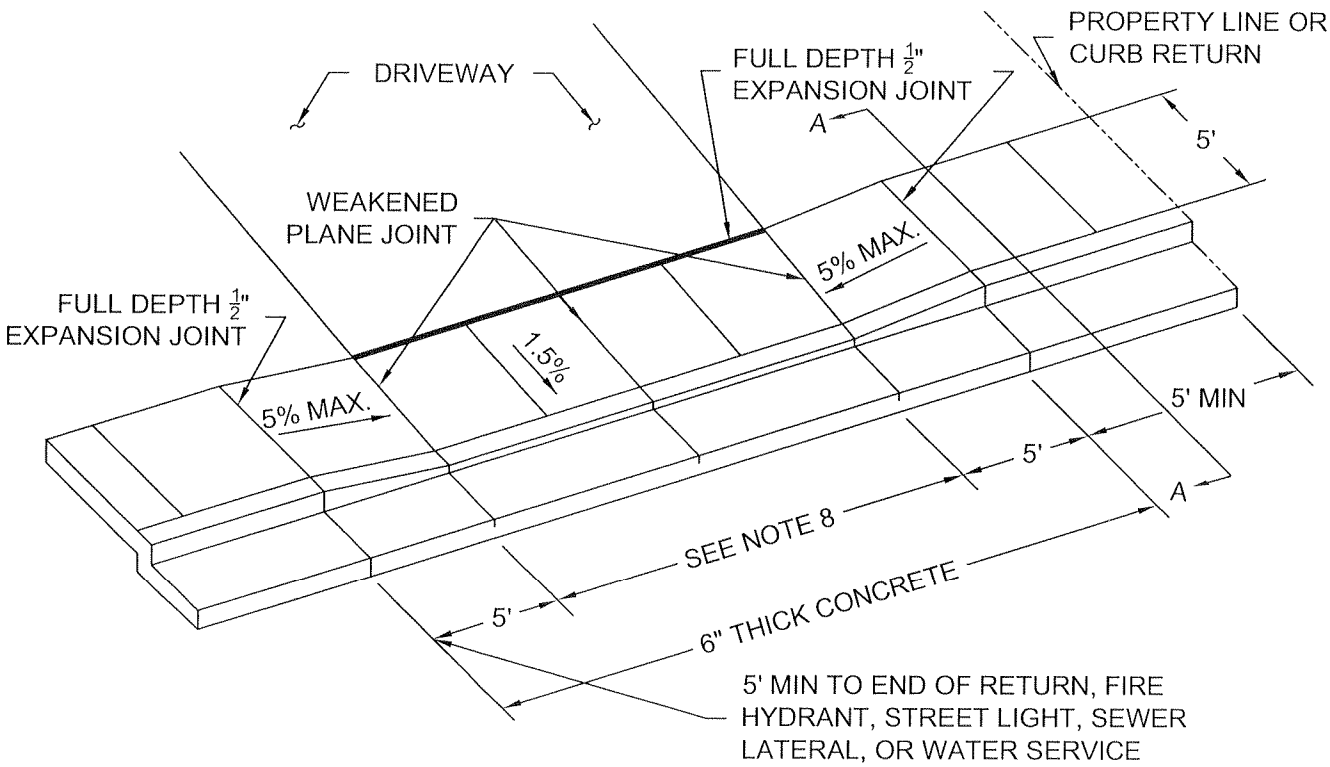

NOTES:

1. USE CITY STANDARD CONCRETE.
2. SCORE LINES SHALL BE ½" DEEP AND FORM A SQUARE.
3. WEAKENED PLANE JOINTS SHALL BE 1¼" DEEP AND INSTALLED AT 12' MAX INTERVALS TO MATCH SCORE LINES.
4. APPLY "FINE BROOM" FINISH TO SIDEWALK PERPENDICULAR TO STREET; APPLY "FINE BROOM" FINISH TO CURB AND GUTTER PARALLEL TO STREET.
5. NEW SIDEWALK, CURB AND GUTTER SHALL BE MONOLITHICALLY POURED.
6. EXISTING CONCRETE TO BE MATCHED SHALL BE DRILLED AND DOWELED WITH 8" LONG, #4 REBAR AT 12" MAXIMUM ON CENTER, PER DETAIL 3000.
7. ALL CORNERS SHALL HAVE ½" TOOLED RADIUS.
8. DRIVEWAY CUT SHALL ALIGN WITH AND BE OF EQUAL WIDTH AS THE APPROACH TO THE GARAGE OR OTHER APPROVED PARKING AREA. MINIMUM WIDTH OF 16' AND MAXIMUM OF 30'.
9. IF ADJACENT ASPHALT IS DAMAGED, IT MUST BE REPLACED PER DETAIL 3130.

DIXON CALIFORNIA — CITY OF DIXON ENGINEERING STANDARD DETAIL	REGISTERED PROFESSIONAL ENGINEER — BRUCE W. CUNNINGHAM — No. C041985 — EXP. 03/31/10 — CIVIL — STATE OF CALIFORNIA APPROVED: NOVEMBER 2009	RESIDENTIAL DRIVEWAY CONVENTIONAL VERTICAL CURB	3080

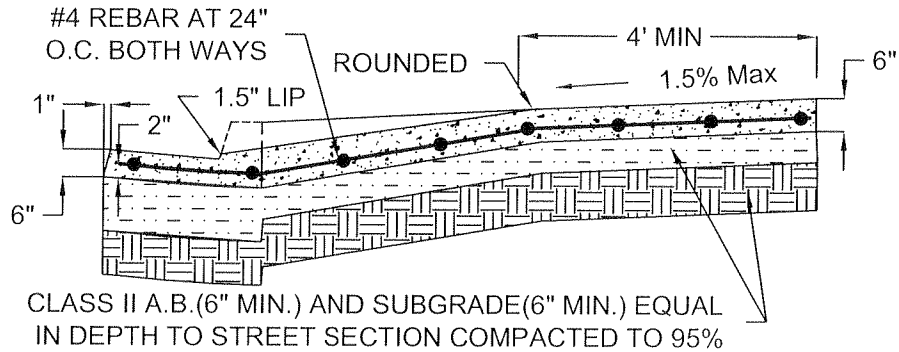

DRIVEWAY SECTION

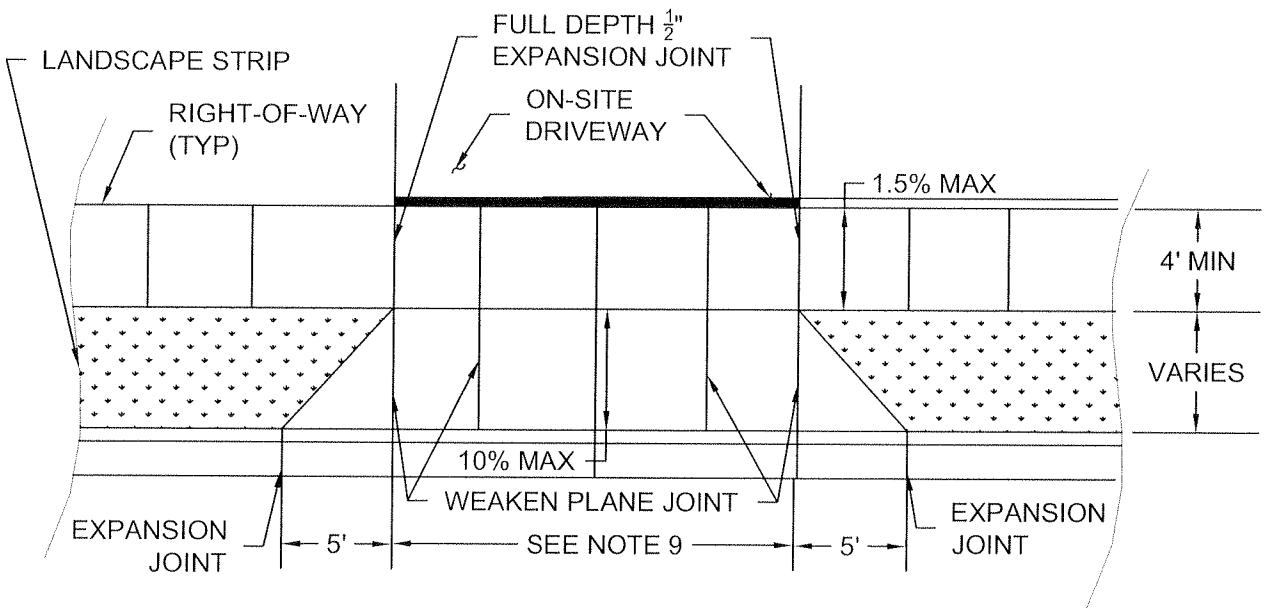

NOTES:

1. USE CITY STANDARD CONCRETE.
2. SCORE LINES SHALL BE ½" DEEP AND FORM A SQUARE.
3. WEAKENED PLANE JOINTS SHALL BE 1¼" DEEP AND INSTALLED AT 12' MAX INTERVALS TO MATCH SCORE LINES.
4. PLACE EXPANSION JOINTS AT CURB RETURNS, TRANSITIONS TO DRAIN INLETS, AND DRIVEWAYS AND 60' INTERVALS.
5. APPLY "FINE BROOM" FINISH TO SIDEWALK PERPENDICULAR TO STREET; APPLY "FINE BROOM" FINISH TO CURB AND GUTTER PARALLEL TO STREET.
6. NEW SIDEWALK, CURB AND GUTTER SHALL BE MONOLITHICALLY POURED.
7. EXISTING CONCRETE TO BE MATCHED SHALL BE DRILLED AND DOWELED WITH 12" LONG, #4 REBAR AT 12" MAXIMUM ON CENTER, PER DETAIL 3000.
8. ALL CORNERS SHALL HAVE ½" TOOLED RADIUS.
9. DRIVEWAY CUT SHALL ALIGN WITH AND BE OF EQUAL WIDTH AS THE APPROACH TO THE GARAGE OR OTHER APPROVED PARKING AREA. MINIMUM WIDTH OF 16' AND MAXIMUM OF 30'.
10. IF ADJACENT ASPHALT IS DAMAGED, IT MUST BE REPLACED PER DETAIL 3130.

3090	RESIDENTIAL DRIVEWAY SEPARATED SIDEWALK	REGISTERED PROFESSIONAL ENGINEER PRINCE W. CUNNINGHAM No. C041985 EXP. 03/31/10 CIVIL STATE OF CALIFORNIA APPROVED: NOVEMBER 2009	CITY OF DIXON ENGINEERING STANDARD DETAIL DIXON CALIFORNIA

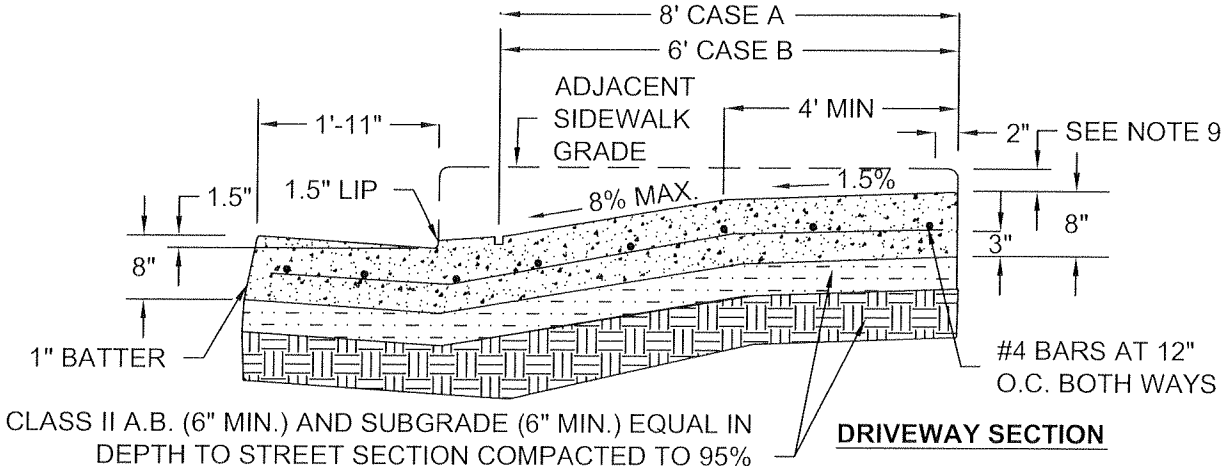

DRIVEWAY SECTION

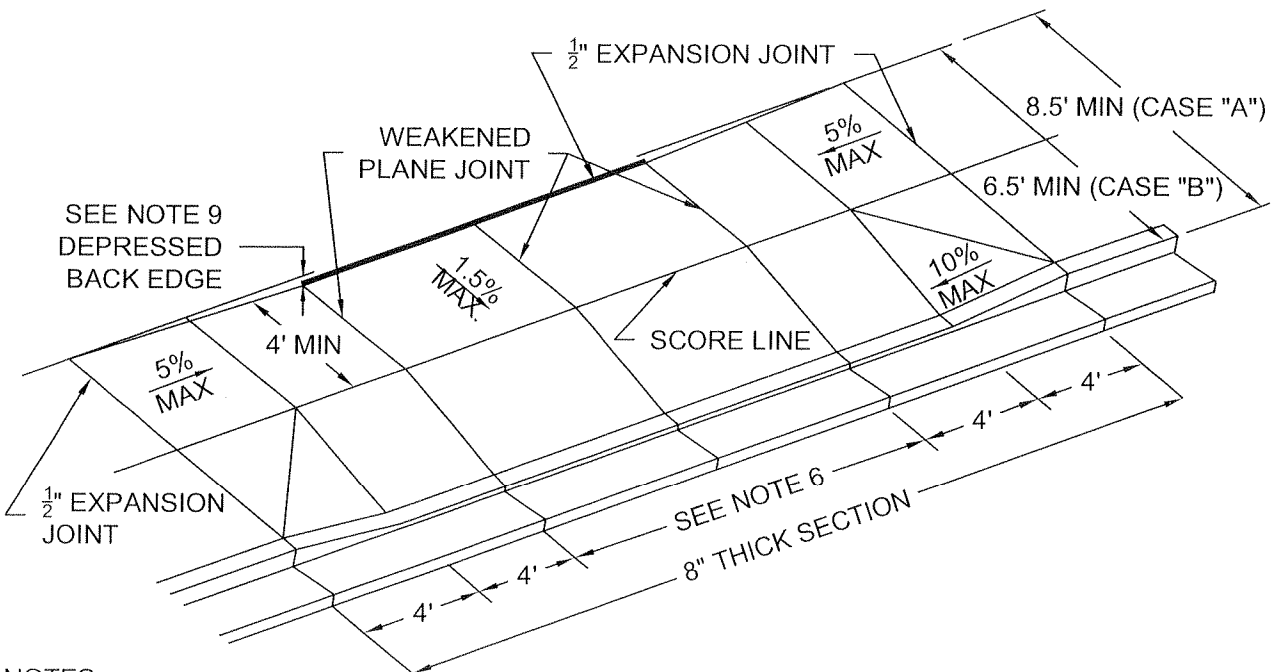

NOTES:

1. USE CITY STANDARD CONCRETE.
2. SCORE LINES SHALL BE ½" DEEP AND FORM A SQUARE.
3. APPLY "FINE BROOM" FINISH TO SIDEWALK PERPENDICULAR TO STREET; APPLY "FINE BROOM" FINISH TO CURB AND GUTTER PARALLEL TO STREET.
4. NEW SIDEWALK, CURB AND GUTTER SHALL BE MONOLITHICALLY POURED.
5. EXISTING CONCRETE TO BE MATCHED SHALL BE DRILLED AND DOWELED WITH 12" LONG, #4 REBAR AT 12" MAXIMUM ON CENTER, PER DETAIL 3000.
6. DRIVEWAY CUT SHALL ALIGN WITH AND BE OF EQUAL WIDTH AS THE APPROACH TO THE GARAGE OR OTHER APPROVED PARKING AREA. ONE-WAY DRIVEWAYS SHALL BE BETWEEN 18' TO 24' AND TWO-WAY DRIVEWAYS SHALL BE BETWEEN 30' TO 36'.
7. IF ADJACENT ASPHALT IS DAMAGED, IT MUST BE REPLACED PER DETAIL 3130.
8. THIS DETAIL IS TO BE USED AT ALL COMMERCIAL LOCATIONS WITH SIDEWALK. DETAIL 3120 SHALL BE USED AT INDUSTRIAL LOCATIONS WITHOUT SIDEWALK.
9. DEPRESSION AT BACK EDGE OF DRIVEWAY FOR CASE "A" IS 1.5" AND FOR CASE "B" IS 3".

DIXON CALIFORNIA — CITY OF DIXON ENGINEERING STANDARD DETAIL	REGISTERED PROFESSIONAL ENGINEER W. CUNNINGHAM No. C041983 EXP. 03/31/10 CIVIL STATE OF CALIFORNIA APPROVED: NOVEMBER 2009	COMMERCIAL DRIVEWAY	3100

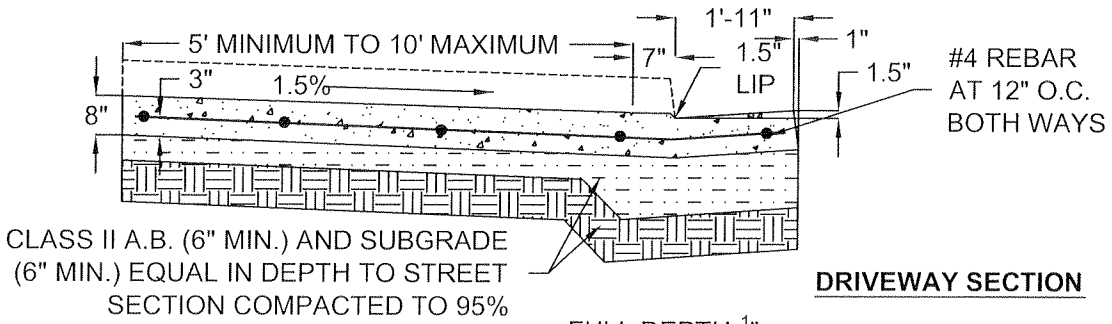

DRIVEWAY SECTION

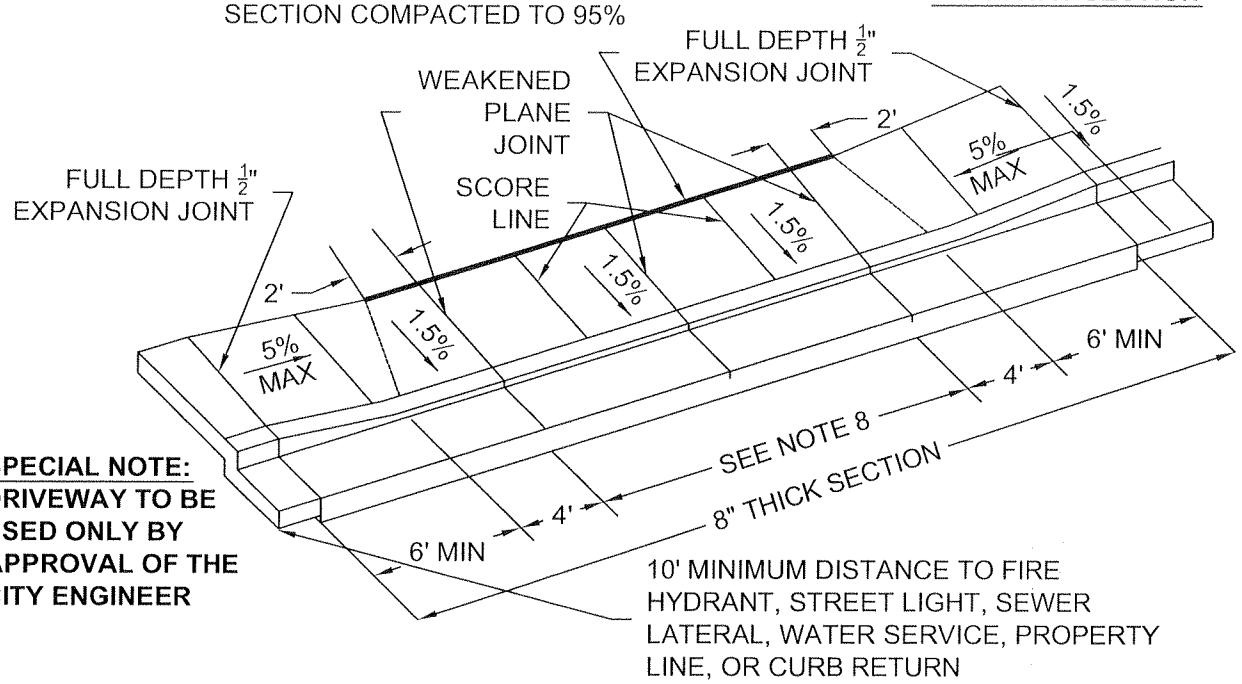

SPECIAL NOTE:
DRIVEWAY TO BE USED ONLY BY APPROVAL OF THE CITY ENGINEER

NOTES:

1. USE CITY STANDARD CONCRETE.
2. SCORE LINES SHALL BE ½" DEEP AND FORM A SQUARE.
3. WEAKENED PLANE JOINTS SHALL BE 1¼" DEEP AND INSTALLED AT 12' MAX INTERVALS TO MATCH SCORE LINES.
4. APPLY "FINE BROOM" FINISH TO SIDEWALK PERPENDICULAR TO STREET; APPLY "FINE BROOM" FINISH TO CURB AND GUTTER PARALLEL TO STREET.
5. NEW DRIVEWAY, SIDEWALK, CURB AND GUTTER SHALL BE MONOLITHICALLY POURED.
6. EXISTING CONCRETE TO BE MATCHED SHALL BE DRILLED AND DOWELED WITH 12" LONG, #4 REBAR AT 12" MAXIMUM ON CENTER, PER DETAIL 3000.
7. ALL CORNERS SHALL HAVE ½" TOOLED RADIUS.
8. DRIVEWAY CUT SHALL ALIGN WITH AND BE OF EQUAL WIDTH AS THE APPROACH TO THE GARAGE OR OTHER APPROVED PARKING AREA. ONE-WAY WIDTH SHALL BE 24' MINIMUM AND TWO WAY WIDTH SHALL BE 36' MINIMUM.
9. IF ADJACENT ASPHALT IS DAMAGED, IT MUST BE REPLACED PER DETAIL 3130.
10. THIS DETAIL IS TO BE USED AT ALL COMMERCIAL LOCATIONS AND AT INDUSTRIAL LOCATIONS WITH SIDEWALK. DETAIL 3120 IS TO BE USED AT INDUSTRIAL LOCATIONS WITHOUT SIDEWALK.
11. BACK EDGE OF DRIVEWAY SHALL BE SET 4" ABOVE FLOW LINE.

3110	COMMERCIAL DRIVEWAY WITH RESTRICTED R/W	REGISTERED PROFESSIONAL ENGINEER JAMES W. CUNNINGHAM No.C041983 EXP. 03/31/10 CIVIL STATE OF CALIFORNIA APPROVED: NOVEMBER 2009	CITY OF DIXON ENGINEERING STANDARD DETAIL DIXON CALIFORNIA

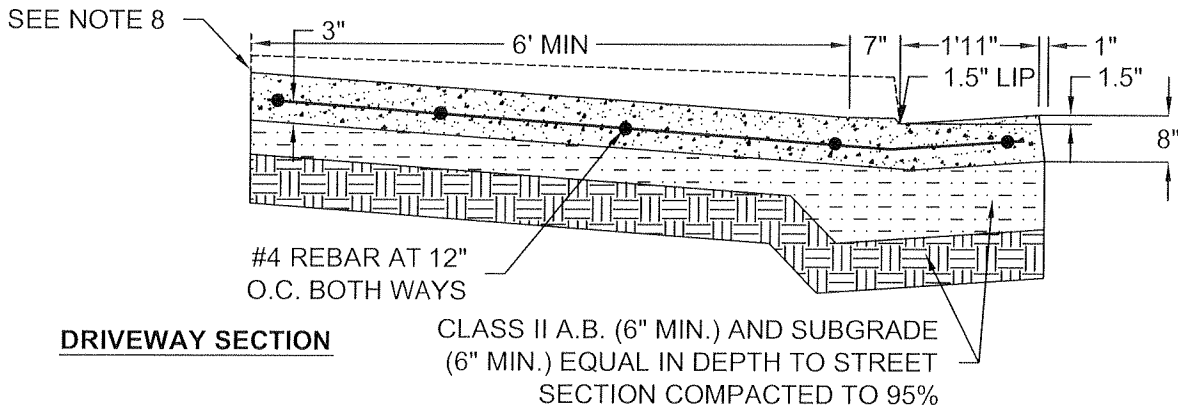

DRIVEWAY SECTION

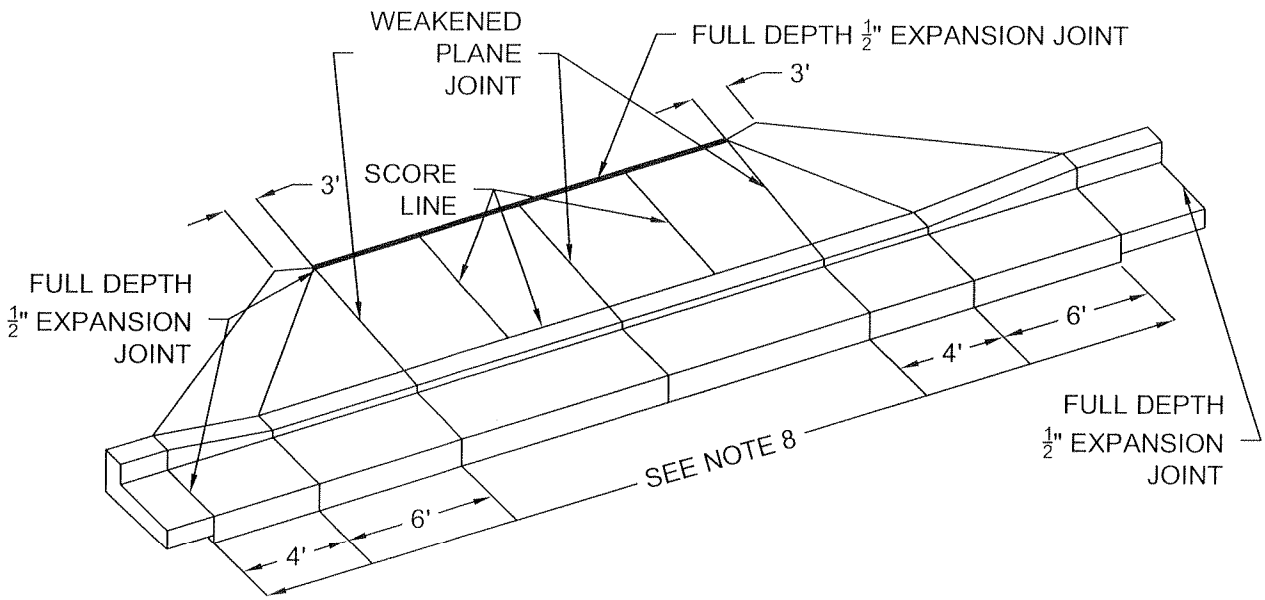

NOTES:

1. USE CITY STANDARD CONCRETE.
2. SCORE LINES SHALL BE ½" DEEP AND FORM A SQUARE.
3. WEAKENED PLANE JOINTS SHALL BE 1¼" DEEP AND INSTALLED AT 12' MAX INTERVALS TO MATCH SCORE LINES.
4. APPLY "FINE BROOM" FINISH TO SIDEWALK PERPENDICULAR TO STREET; APPLY "FINE BROOM" FINISH TO CURB AND GUTTER PARALLEL TO STREET.
5. NEW DRIVEWAY, SIDEWALK, CURB AND GUTTER SHALL BE MONOLITHICALLY POURED.
6. EXISTING CONCRETE TO BE MATCHED SHALL BE DRILLED AND DOWELED WITH 12" LONG, #4 REBAR AT 12" MAXIMUM ON CENTER, PER DETAIL 3000.
7. ALL CORNERS SHALL HAVE ½" TOOLED RADIUS.
8. DRIVEWAY CUT SHALL ALIGN WITH AND BE OF EQUAL WIDTH AS THE APPROACH TO THE GARAGE OR OTHER APPROVED PARKING AREA. ONE-WAY WIDTH SHALL BE 24' MINIMUM AND TWO WAY WIDTH SHALL BE 36' MINIMUM.
9. IF ADJACENT ASPHALT IS DAMAGED, IT MUST BE REPLACED PER DETAIL 3130.
10. WHERE SIDEWALK EXISTS IN INDUSTRIAL AREA, DETAIL 3100 SHALL BE USED.
11. BACK EDGE OF DRIVEWAY SHALL BE SET 4" ABOVE FLOW LINE.

DIXON CALIFORNIA — CITY OF DIXON ENGINEERING STANDARD DETAIL	REGISTERED PROFESSIONAL ENGINEER PRINCE W. CUNNINGHAM No. C041985 EXP. 03/31/10 CIVIL STATE OF CALIFORNIA APPROVED: NOVEMBER 2009	INDUSTRIAL DRIVEWAY	3120

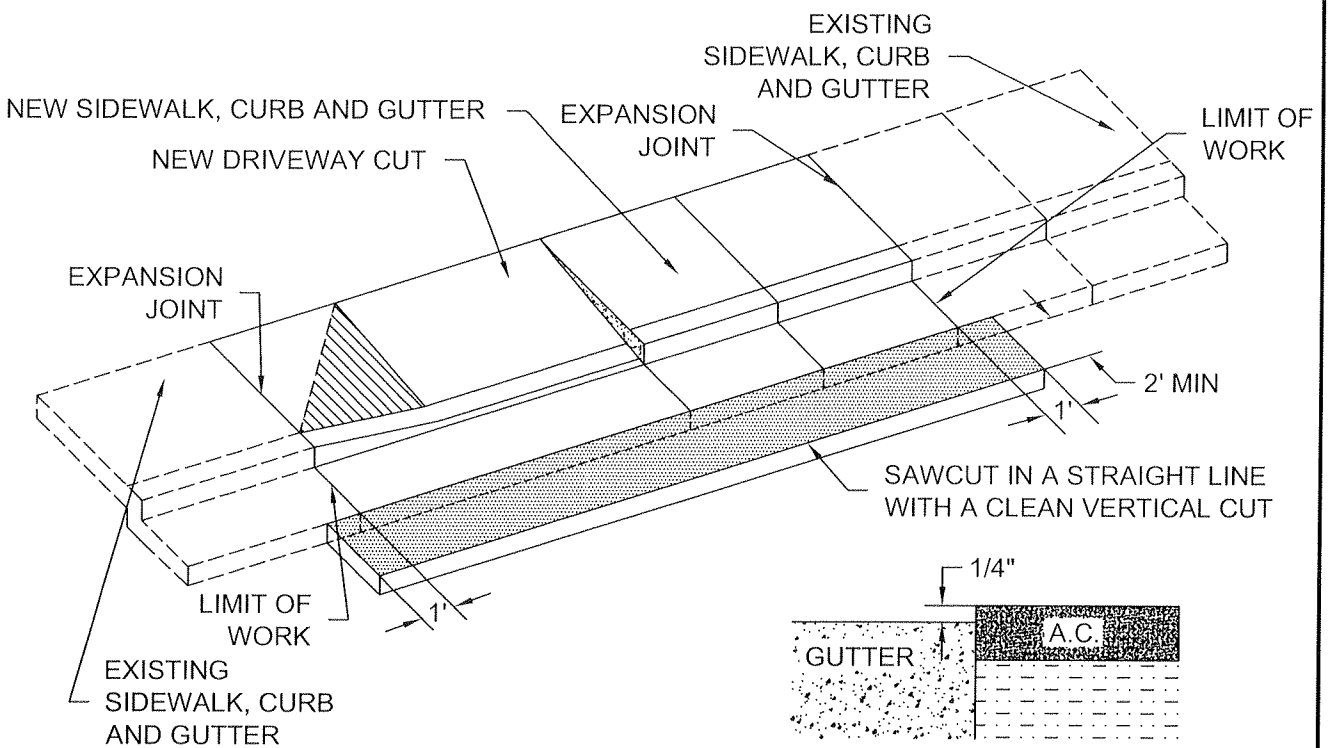

LIP DETAIL

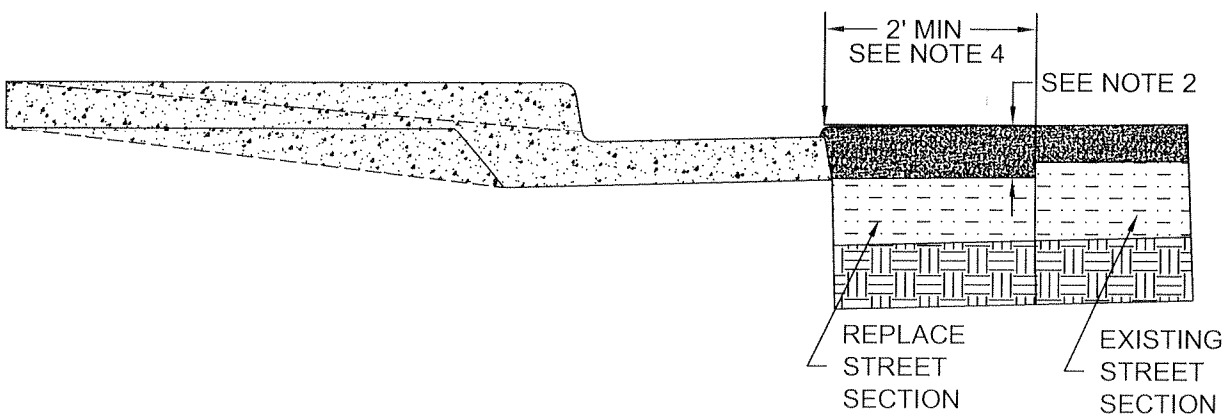

NOTES:

1. TEMPORARY CUTBACK SHALL BE PLACED IMMEDIATELY AFTER BACKFILL AND SHALL BE MAINTAINED BY THE CONTRACTOR UNTIL PERMANENT PAVING IS INSTALLED. PRIOR TO PERMANENT PATCH, EXISTING A.C. SHALL BE SAWCUT TO A NEAT EDGE AND SHALL BE TACK COATED PRIOR TO PAVING.
2. PERMANENT A.C. PAVING SHALL BE 1" GREATER IN THICKNESS THAN EXISTING PAVING WITH A MINIMUM THICKNESS OF 4".
3. REMOVE TO EXISTING SCORE MARK, WEAKENED PLANE JOINT OR EXPANSION JOINT.
4. ADDITIONAL REPLACEMENT MAY BE REQUIRED DUE TO MORE EXTENSIVELY DAMAGED A.C.

3130	STREET REPLACEMENT AT DRIVEWAY OR CURB AND GUTTER	REGISTERED PROFESSIONAL ENGINEER JAMES W. CUNNINGHAM No.C041085 EXP. 03/31/10 CIVIL STATE OF CALIFORNIA APPROVED: NOVEMBER 2009	CITY OF DIXON ENGINEERING STANDARD DETAIL DIXON CALIFORNIA

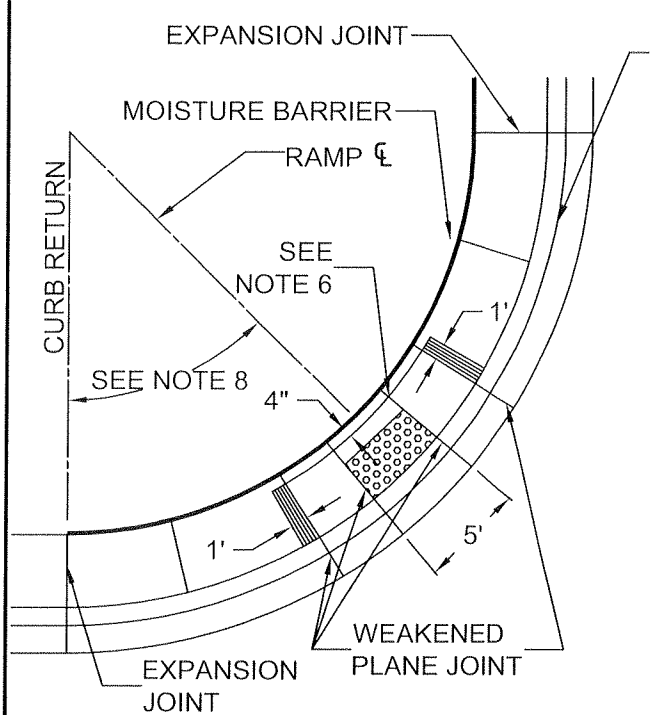

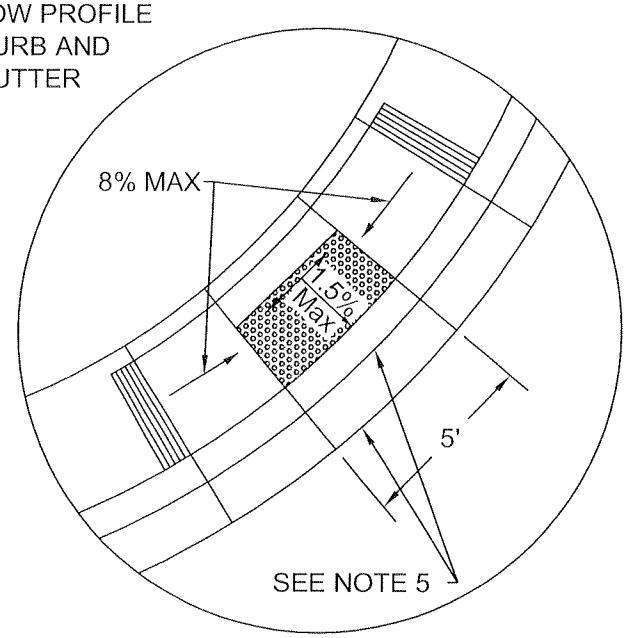

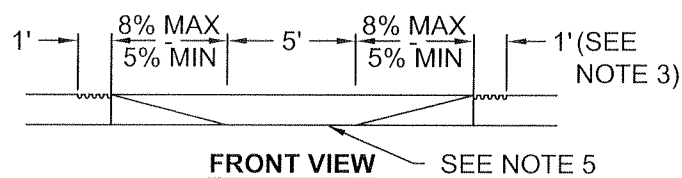

FRONT VIEW

NOTES:

1. REFER TO APPLICABLE DETAIL 3000, 3010, OR 3020 FOR CURB, GUTTER AND SIDEWALK DETAILS AND NOTES.
2. REFER TO DS 3-14 FOR RAMP LOCATION.
3. A 12" WIDE GROOVED BORDER SHALL BE PLACED AT THE DEEP JOINT OF EACH RAMP TRANSITION.
4. THE SURFACE OF THE RAMP AND FLARES SHALL HAVE A TRANSVERSED BROOMED SURFACE ROUGHER THAN THE SURROUNDING SIDEWALK.
5. TRANSITION FROM RAMP TO GUTTER SHALL BE FLUSH. FROM GUTTER FLOWLINE TO 4' BEYOND LIP SHALL BE A MAXIMUM OF 5%.
6. RETAINING CURB SHALL BE INSTALLED BEHIND THE SIDEWALK, WHEN NECESSARY, TO MAINTAIN 4' CLEAR PATH OF TRAVEL.
7. CURB RAMPS SHALL HAVE DETECTABLE WARNING SURFACE THAT EXTENDS THE FULL WIDTH OF THE RAMP AND A DEPTH OF 3'. THE EDGE OF THE DETECTABLE WARNING SURFACE NEAREST THE STREET SHALL BE BETWEEN 6" AND 8" FROM THE GUTTER FLOWLINE; REFER TO CS 15-02.
8. CENTERLINE OF RAMP TO BE VERIFIED BY CITY PRIOR TO PLACEMENT OF FORMS.
9. USE CITY STANDARD CONCRETE.

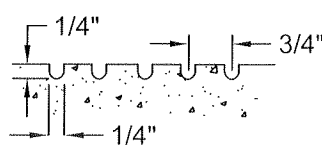

GROOVING DETAIL

SPECIAL NOTE:
THIS RAMP TO BE USED ONLY BY APPROVAL OF THE CITY ENGINEER

DIXON CALIFORNIA CITY OF DIXON ENGINEERING STANDARD DETAIL	REGISTERED PROFESSIONAL ENGINEER LEONARD W. CUNNINGHAM No. C041985 EXP. 03/31/10 CIVIL STATE OF CALIFORNIA APPROVED: NOVEMBER 2009	CURB RAMP (TYPE 1) RESIDENTIAL STREET	3140

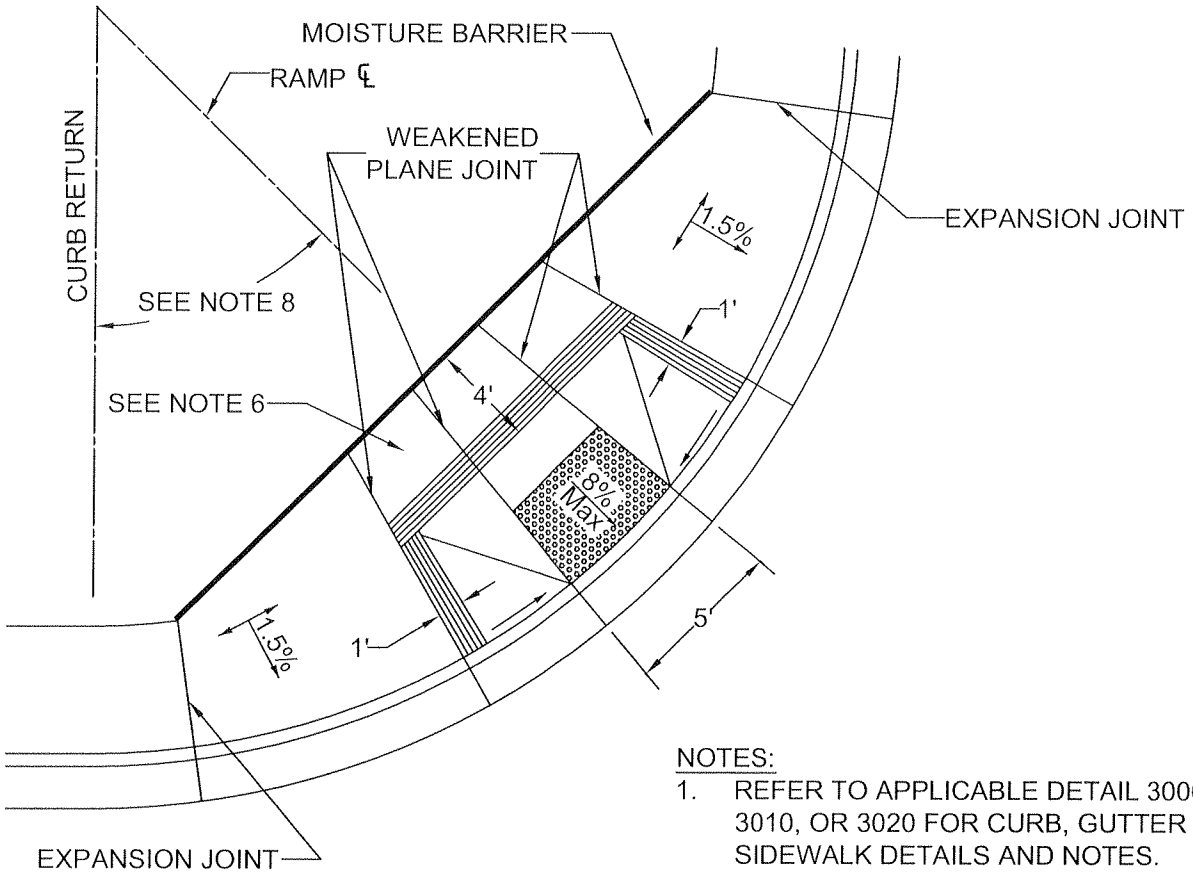

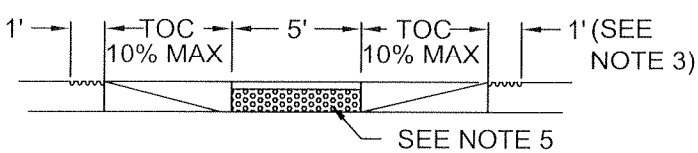

FRONT VIEW

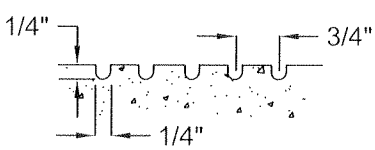

GROOVING DETAIL

NOTES:

1. REFER TO APPLICABLE DETAIL 3000, 3010, OR 3020 FOR CURB, GUTTER AND SIDEWALK DETAILS AND NOTES.
2. REFER TO DS 3-14 FOR RAMP LOCATION.
3. A 12" WIDE GROOVED BORDER SHALL BE PLACED AT THE DEEP JOINT OF EACH RAMP TRANSITION.
4. THE SURFACE OF THE RAMP AND FLARES SHALL HAVE A TRANSVERSED BROOMED SURFACE ROUGHER THAN THE SURROUNDING SIDEWALK.
5. TRANSITION FROM RAMP TO GUTTER SHALL BE FLUSH. FROM GUTTER FLOWLINE TO 4' BEYOND LIP SHALL BE A MAXIMUM OF 5%.
6. RAMP LANDING SHALL SLOPE 1.5% FROM BACK EDGE OF WALK TOWARD GUTTER.
7. CURB RAMPS SHALL HAVE DETECTABLE WARNING SURFACE THAT EXTENDS THE FULL WIDTH OF THE RAMP AND A DEPTH OF 3'. THE EDGE OF THE DETECTABLE WARNING SURFACE NEAREST THE STREET SHALL BE BETWEEN 6" AND 8" FROM THE GUTTER FLOWLINE; REFER TO CS 15-02.
8. CENTERLINE OF RAMP TO BE VERIFIED BY CITY PRIOR TO PLACEMENT OF FORMS.
9. USE CITY STANDARD CONCRETE.

3150	CURB RAMP (TYPE 2) RESIDENTIAL AND COLLECTOR STREET	REGISTERED PROFESSIONAL ENGINEER JAMES W. CUNNINGHAM No.C041985 EXP. 03/31/10 CIVIL STATE OF CALIFORNIA APPROVED: NOVEMBER 2009	CITY OF DIXON ENGINEERING STANDARD DETAIL DIXON CALIFORNIA

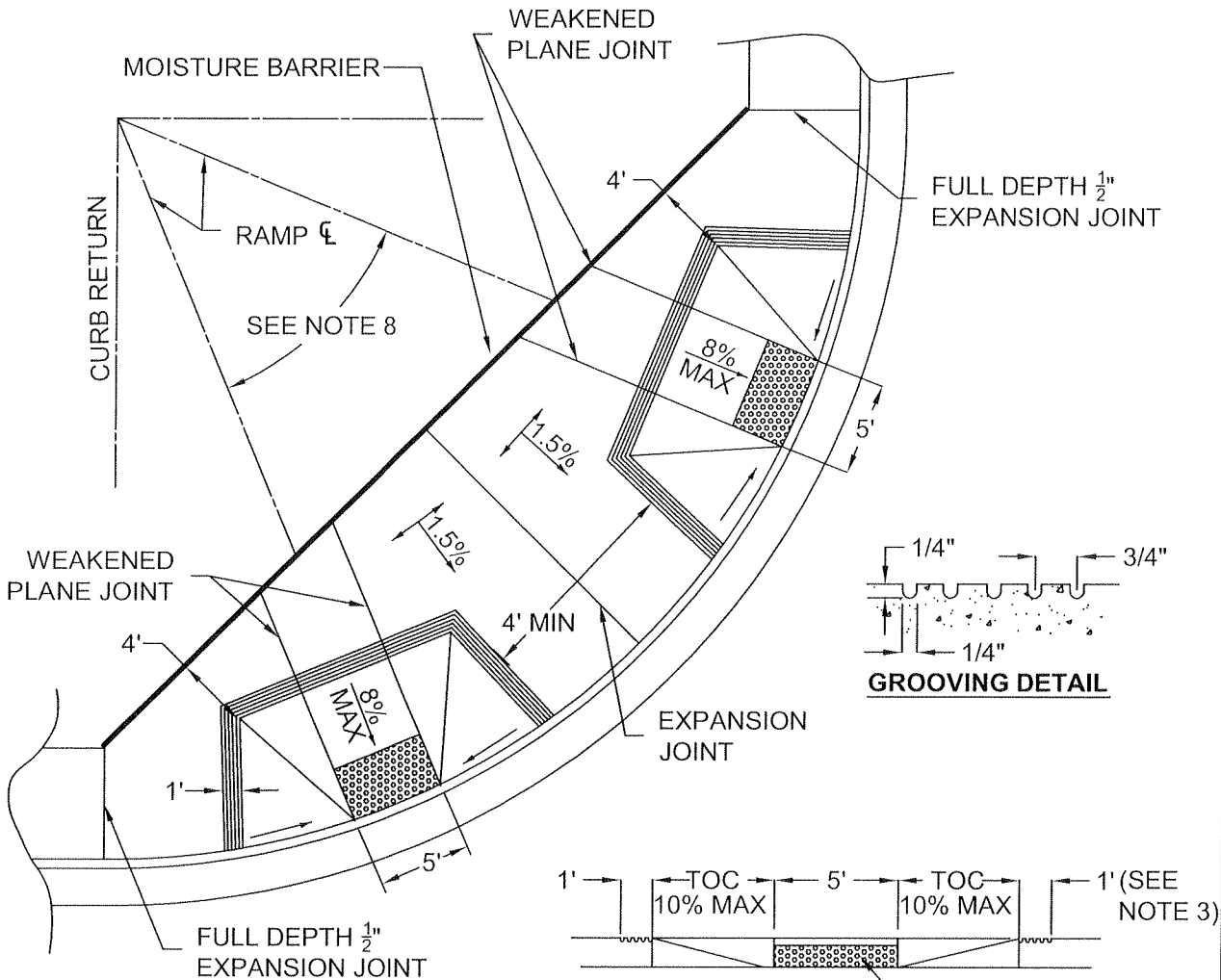

FRONT VIEW

NOTES:

1. REFER TO APPLICABLE DETAIL 3000, 3010, OR 3020 FOR CURB, GUTTER AND SIDEWALK DETAILS AND NOTES.
2. REFER TO DS 3-14 FOR RAMP LOCATION.
3. A 12" WIDE GROOVED BORDER SHALL BE PLACED AT THE DEEP JOINT OF EACH RAMP TRANSITION.
4. THE SURFACE OF THE RAMP AND FLARES SHALL HAVE A TRANSVERSED BROOMED SURFACE ROUGHER THAN THE SURROUNDING SIDEWALK.
5. TRANSITION FROM RAMP TO GUTTER SHALL BE FLUSH. FROM GUTTER FLOWLINE TO 4' BEYOND LIP SHALL BE A MAXIMUM OF 5%.
6. RAMP LANDING SHALL SLOPE 1.5% FROM BACK EDGE OF WALK TOWARD GUTTER.
7. CURB RAMPS SHALL HAVE DETECTABLE WARNING SURFACE THAT EXTENDS THE FULL WIDTH OF THE RAMP AND A DEPTH OF 3'. THE EDGE OF THE DETECTABLE WARNING SURFACE NEAREST THE STREET SHALL BE BETWEEN 6" AND 8" FROM THE GUTTER FLOWLINE; REFER TO CS 15-02.
8. CENTERLINE OF RAMP TO BE VERIFIED BY CITY PRIOR TO PLACEMENT OF FORMS.
9. USE CITY STANDARD CONCRETE.
10. THE MINIMUM INTERSECTION RADII AT THE CURB FACE OF A MAJOR COLLECTOR IS 40' AND 50' FOR AN ARTERIAL.

DIXON CALIFORNIA CITY OF DIXON ENGINEERING STANDARD DETAIL	REGISTERED PROFESSIONAL ENGINEER CLAUDE W. CUNNINGHAM No. C041883 EXP. 03/31/10 CIVIL STATE OF CALIFORNIA APPROVED: NOVEMBER 2009	CURB RAMP (TYPE 3) ARTERIAL AND COLLECTOR STREET	3160

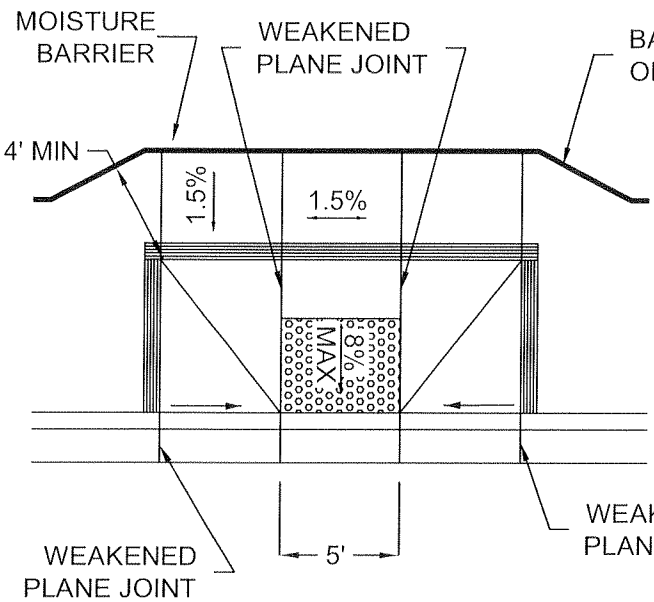

TYPE 4

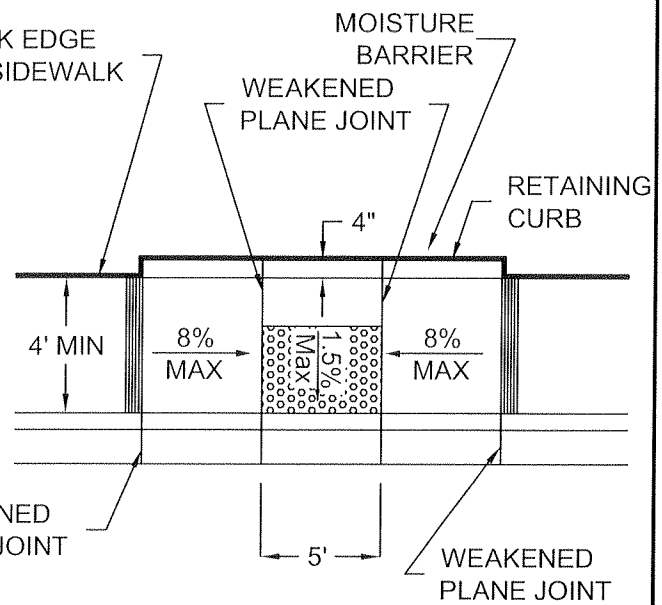

TYPE 5

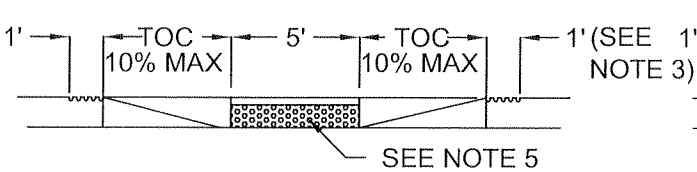

FRONT VIEW

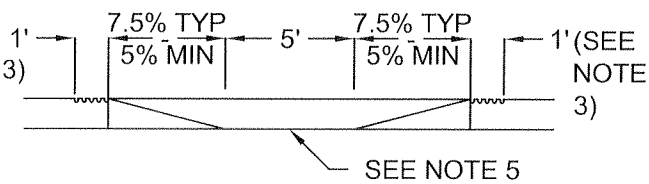

FRONT VIEW

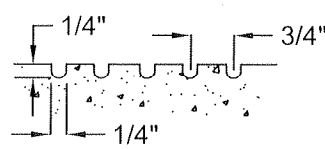

GROOVING DETAIL

NOTES:

1. REFER TO APPLICABLE DETAIL 3000, 3010, OR 3020 FOR CURB, GUTTER AND SIDEWALK DETAILS AND NOTES.
2. REFER TO DS 3-14 FOR RAMP LOCATION.
3. A 12" WIDE GROOVED BORDER SHALL BE PLACED AT THE DEEP JOINT OF EACH RAMP TRANSITION.
4. THE SURFACE OF THE RAMP AND FLARES SHALL HAVE A TRANSVERSED BROOMED SURFACE ROUGHER THAN THE SURROUNDING SIDEWALK.
5. TRANSITION FROM RAMP TO GUTTER SHALL BE FLUSH. FROM GUTTER FLOW LINE TO 4' BEYOND LIP SHALL BE A MAXIMUM OF 5%.
6. RAMP LANDING SHALL SLOPE 1.5% FROM BACK EDGE OF WALK TOWARD GUTTER.
7. CURB RAMPS SHALL HAVE DETECTABLE WARNING SURFACE THAT EXTENDS THE FULL WIDTH OF THE RAMP AND A DEPTH OF 3'. THE EDGE OF THE DETECTABLE WARNING SURFACE NEAREST THE STREET SHALL BE BETWEEN 6" AND 8" FROM THE GUTTER FLOWLINE; REFER TO CS 15-02.
8. USE CITY STANDARD CONCRETE.

3170	CURB RAMP (TYPE 4 & 5) MID-BLOCK RAMP	REGISTERED PROFESSIONAL ENGINEER JAMES W. CUNNINGHAM No.C061985 EXP. 03/31/10 CIVIL STATE OF CALIFORNIA APPROVED: NOVEMBER 2009	CITY OF DIXON ENGINEERING STANDARD DETAIL DIXON CALIFORNIA

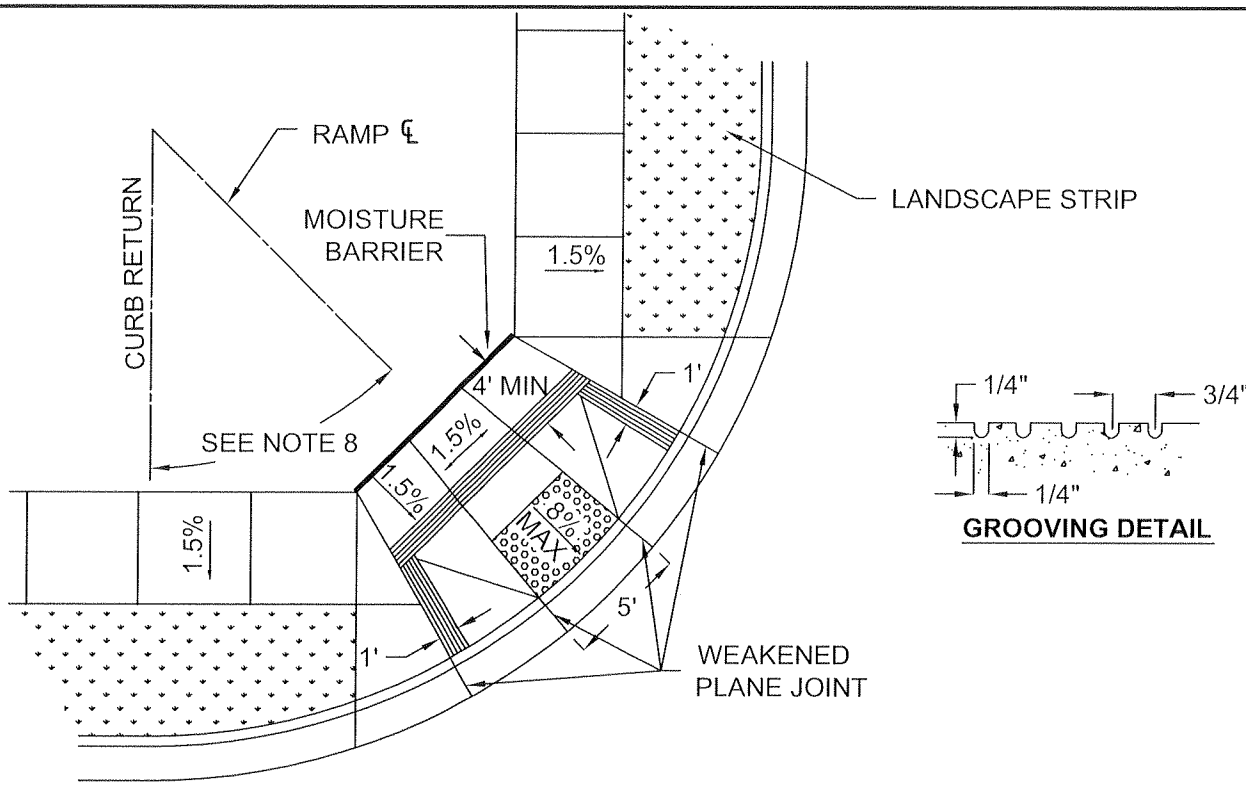

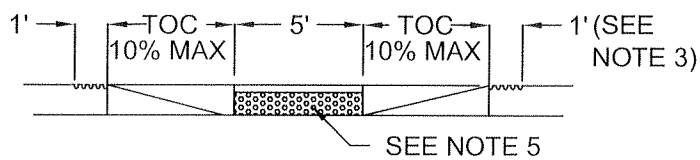

FRONT VIEW

NOTES:

1. REFER TO APPLICABLE DETAIL 3000, 3010, OR 3020 FOR CURB, GUTTER AND SIDEWALK DETAILS AND NOTES.
2. REFER TO DS 3-14 FOR RAMP LOCATION.
3. A 12" WIDE GROOVED BORDER SHALL BE PLACED AT THE DEEP JOINT OF EACH RAMP TRANSITION.
4. THE SURFACE OF THE RAMP AND FLARES SHALL HAVE A TRANSVERSED BROOMED SURFACE ROUGHER THAN THE SURROUNDING SIDEWALK.
5. TRANSITION FROM RAMP TO GUTTER SHALL BE FLUSH. FROM GUTTER FLOWLINE TO 4' BEYOND LIP SHALL BE A MAXIMUM OF 5%.
6. RAMP LANDING SHALL SLOPE 1.5% FROM BACK EDGE OF WALK TOWARD GUTTER.
7. CURB RAMPS SHALL HAVE DETECTABLE WARNING SURFACE THAT EXTENDS THE FULL WIDTH OF THE RAMP AND A DEPTH OF 3'. THE EDGE OF THE DETECTABLE WARNING SURFACE NEAREST THE STREET SHALL BE BETWEEN 6" AND 8" FROM THE GUTTER FLOWLINE; REFER TO CS 15-02.
8. CENTERLINE OF RAMP TO BE VERIFIED BY CITY PRIOR TO PLACEMENT OF FORMS.
9. USE CITY STANDARD CONCRETE.

CITY OF DIXON ENGINEERING STANDARD DETAIL	REGISTERED PROFESSIONAL ENGINEER No.C011985 EXP. 03/31/10 CIVIL STATE OF CALIFORNIA APPROVED: NOVEMBER 2009	CURB RAMP (TYPE 6) RESIDENTIAL AND COLLECTOR STREET	3180

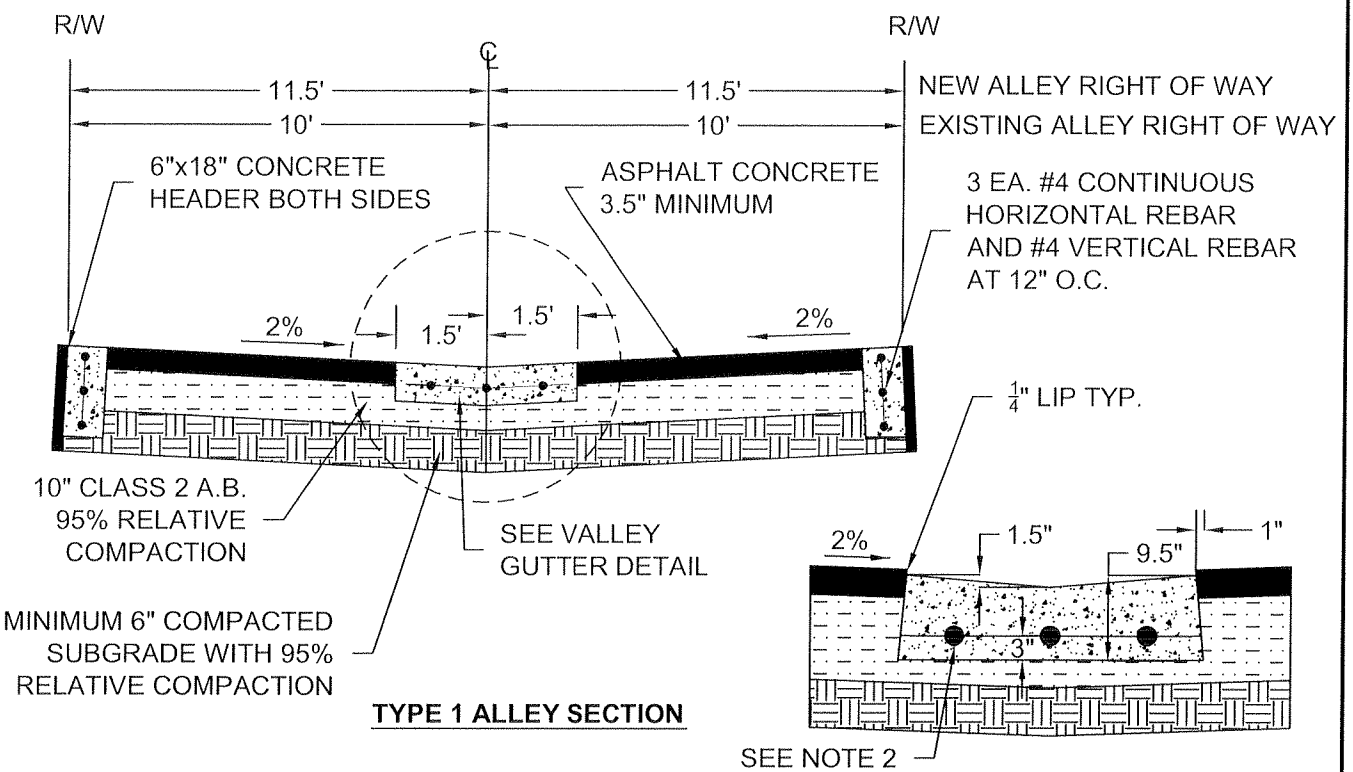

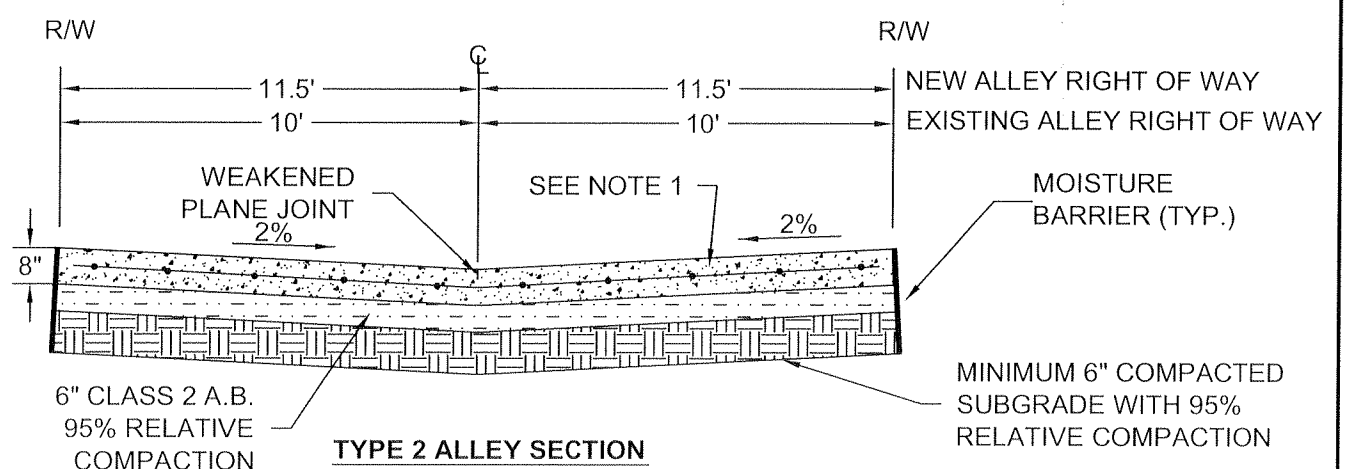

NOTES:

1. CITY STANDARD CONCRETE WITH #4 REBAR AT 18" O.C. BOTH WAYS, 24" MINIMUM OVERLAP.
2. #4 REBAR BOTH WAYS AT 12" O.C. LONGITUDINALLY AND 4' O.C. LATERALLY.
3. APPLY "FINE BROOM" FINISH TO TYPE 2 ALLEY PARALLEL TO CENTERLINE.
4. MINIMUM CORNER RADIUS SHALL BE ½" RADIUS.
5. THE TRANSVERSE WEAKEN PLANE JOINT INTERVAL SHALL BE 10' FOR EXISTING ALLEYS AND 11.5' FOR NEW ALLEYS.
6. EXPANSION JOINT INTERVALS SHALL BE PLACED AT EVERY THIRD TRANSVERSE WEAKEN PLANE JOINT.
7. USE CITY STANDARD CONCRETE.

3190	ALLEY SECTIONS TYPE 1 AND 2 NEW AND EXISTING RIGHT OF WAY	REGISTERED PROFESSIONAL ENGINEER JAMES W. CUNNINGHAM No. C041989 EXP. 03/31/10 CIVIL STATE OF CALIFORNIA APPROVED: NOVEMBER 2009	CITY OF DIXON ENGINEERING STANDARD DETAIL DIXON CALIFORNIA

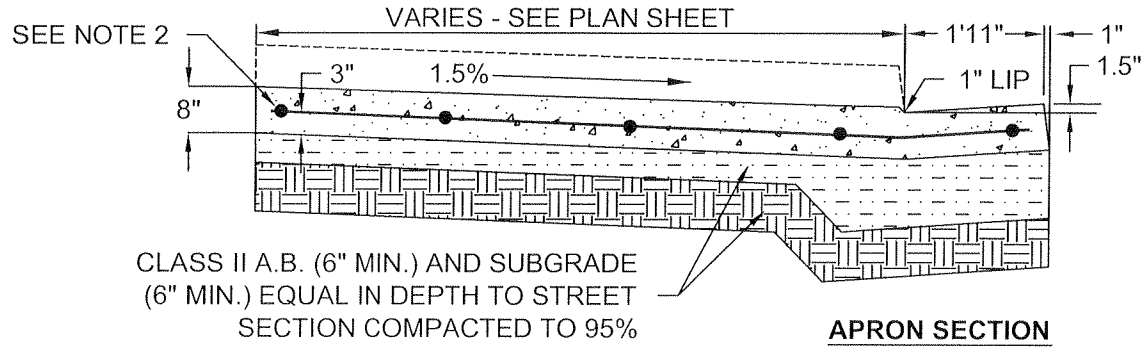

APRON SECTION

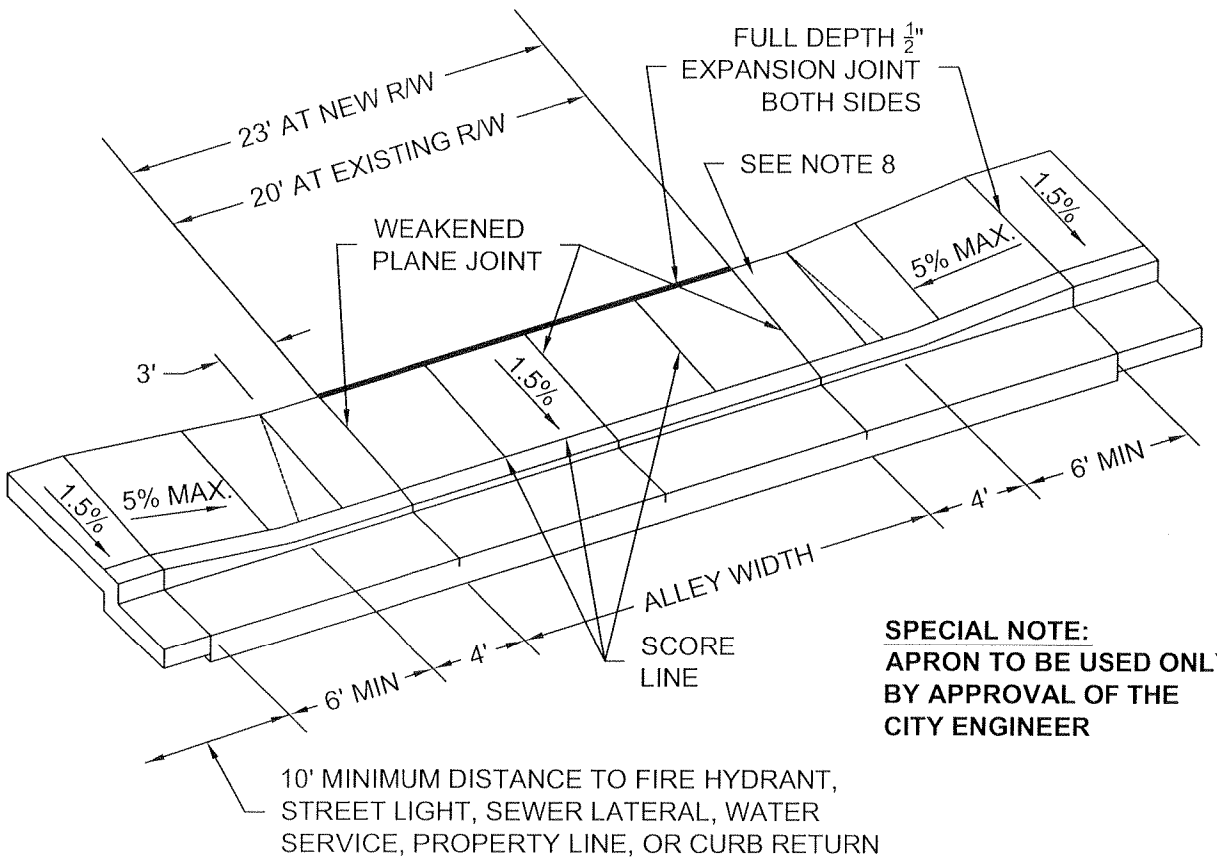

SPECIAL NOTE:
APRON TO BE USED ONLY BY APPROVAL OF THE CITY ENGINEER

NOTES:

1. CITY STANDARD CONCRETE WITH #4 REBAR AT 18" O.C. BOTH WAYS, 24" MINIMUM OVERLAP.
2. SCORE LINES SHALL BE ½" DEEP AND FORM A SQUARE.
3. APPLY "FINE BROOM" FINISH TO SIDEWALK PERPENDICULAR TO STREET; APPLY "FINE BROOM" FINISH TO CURB AND GUTTER PARALLEL TO STREET.
4. ALLEY APRON SHALL BE POURED MONOLITHICALLY.
5. WHEN TYING INTO EXISTING, DRILL AND DOWEL WITH 12" LONG, #4 REBAR AT A MAXIMUM 12" O.C.
6. MINIMUM CORNER RADIUS SHALL BE ½" RADIUS.
7. IF ADJACENT ASPHALT IS DAMAGED, REPLACE USING DETAIL 3130.
8. ALLEY WAY RIGHT OF WAY'S SHALL HAVE DETECTABLE WARNING SURFACE THAT EXTENDS THE FULL WIDTH OF THE SIDEWALK AT A DEPTH OF 3'. REFER TO CS 15-02.

DIXON CALIFORNIA — CITY OF DIXON ENGINEERING STANDARD DETAIL	REGISTERED PROFESSIONAL ENGINEER BRUCE W. CUNNINGHAM No. C041985 EXP. 03/31/10 CIVIL STATE OF CALIFORNIA APPROVED: NOVEMBER 2009	ALLEY APRON	3200

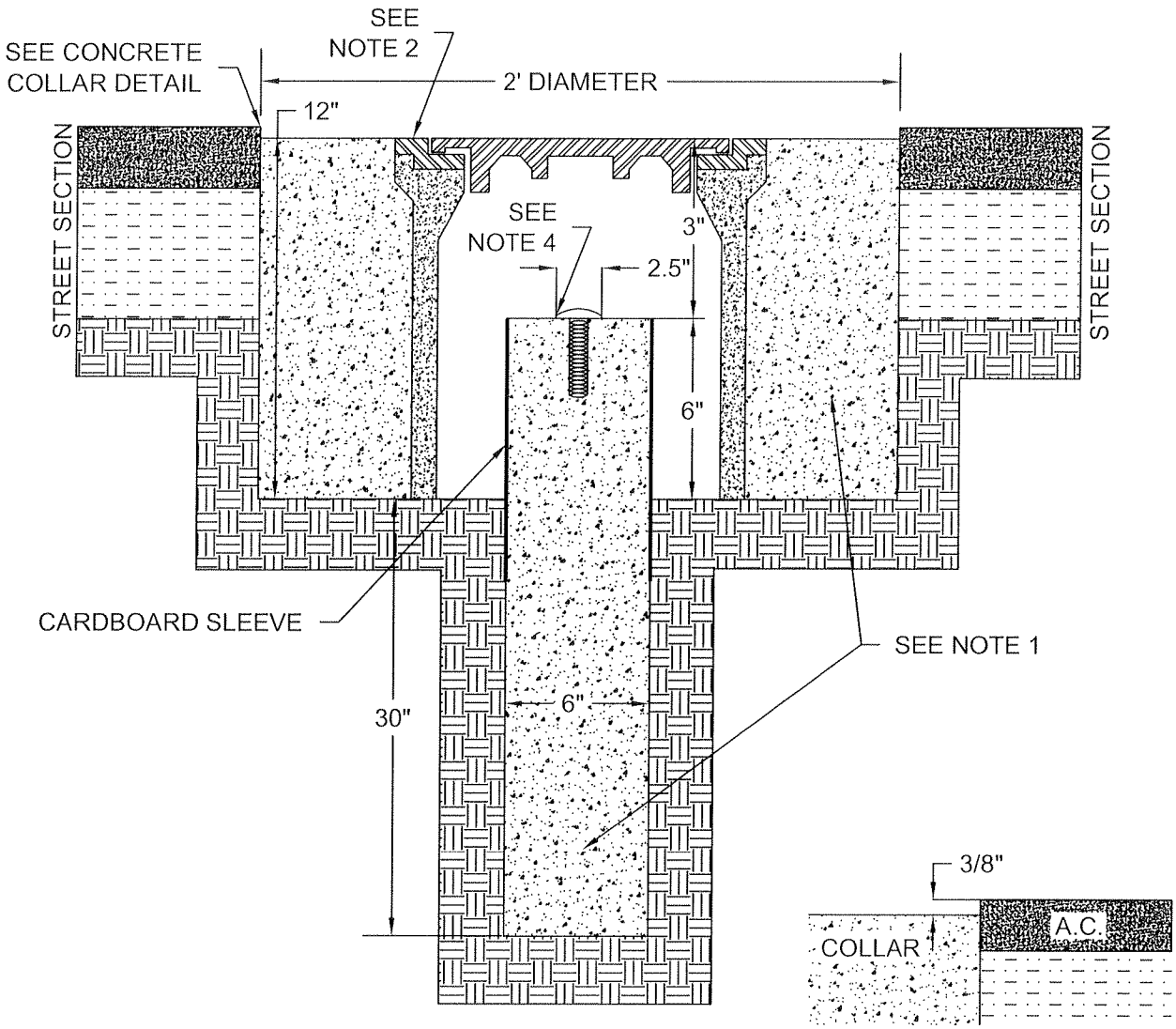

CONCRETE COLLAR DETAIL

NOTES:

1. USE CITY STANDARD CONCRETE.
2. COLLAR SHALL BE INTEGRALLY COLORED WITH PIGMENT #807 AS MANUFACTURED BY DAVIS COLORS.
3. MONUMENT FRAME AND COVER SHALL BE CHRISTY G5 TRAFFIC VALVE BOX OR APPROVED EQUAL. LID SHALL BE MARKED "MONUMENT".
4. SURVEY MARKER SHALL BE LEITZ 8134-16 OR SERVICE CO. 287-C.
5. THE R.E. OR L.S. NUMBER MUST APPEAR ON THE MONUMENT MARKER.
6. MARK REFERENCE POINT WITH A "+".

3210	STREET SURVEY MONUMENT	REGISTERED PROFESSIONAL ENGINEER CLAUDE W. CUNNINGHAM No. C041983 EXP. 03/31/10 CIVIL STATE OF CALIFORNIA APPROVED: NOVEMBER 2009	CITY OF DIXON ENGINEERING STANDARD DETAIL

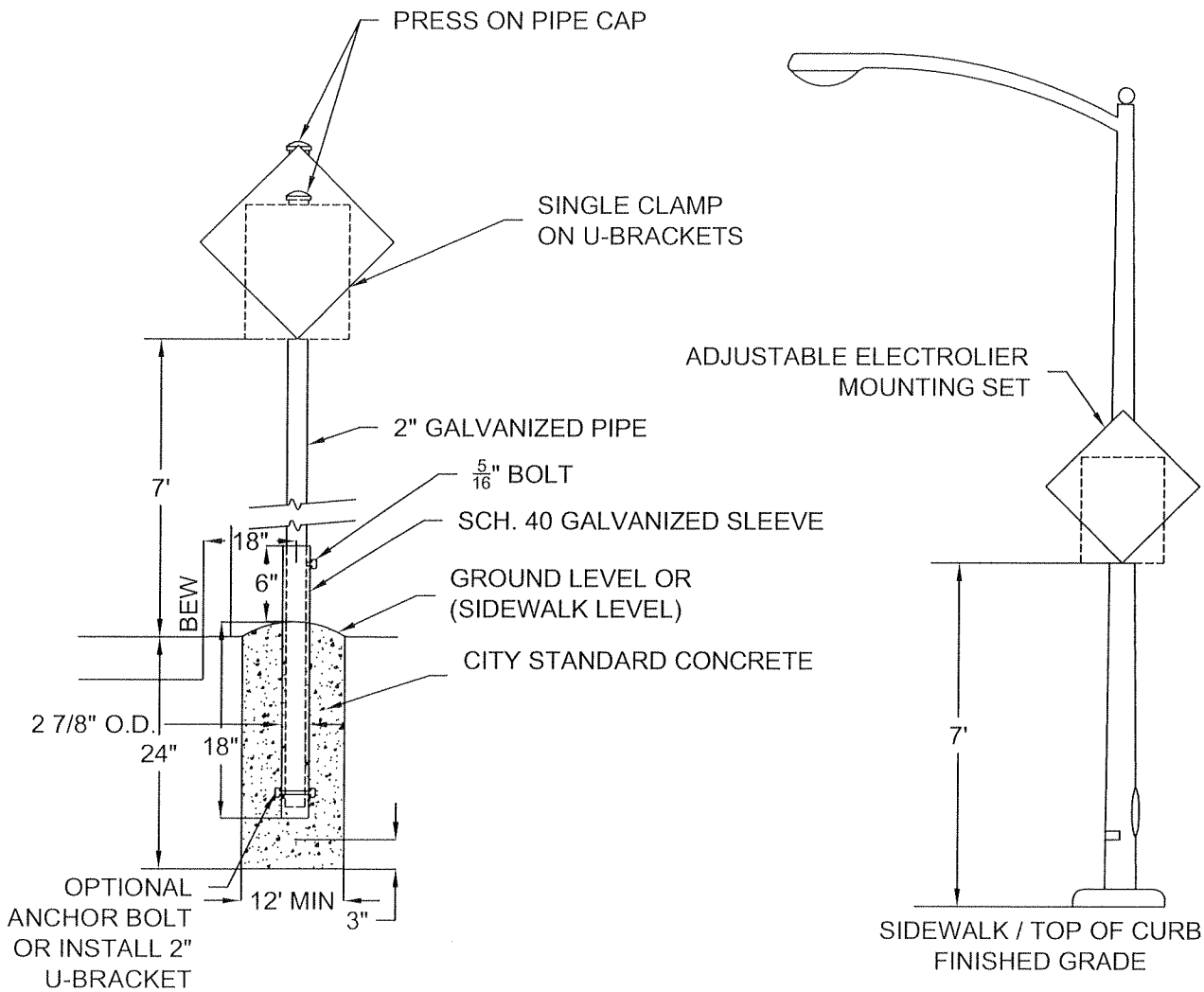

NOTES:

1. SIGN LOCATIONS TO BE DETERMINED BY THE CITY ENGINEER PRIOR TO PLACEMENT.
2. BACK BRACING REQUIRED FOR SIGNS LARGER THAN 18"x24" OR WHERE IDENTIFIED BY THE CITY ENGINEER.
3. ALL SIGNS SHALL BE HIGH-INTENSITY WITH GRAFFITI FILM.
4. ALL MOUNTING HARDWARE SHALL BE APPROVED BY THE CITY ENGINEER PRIOR TO INSTALLATION.

DIXON CALIFORNIA — CITY OF DIXON ENGINEERING STANDARD DETAIL	REGISTERED PROFESSIONAL ENGINEER PRINCE W. CUNNINGHAM No. C041985 EXP. 03/31/10 CIVIL STATE OF CALIFORNIA APPROVED: NOVEMBER 2009	STREET SIGN	3220

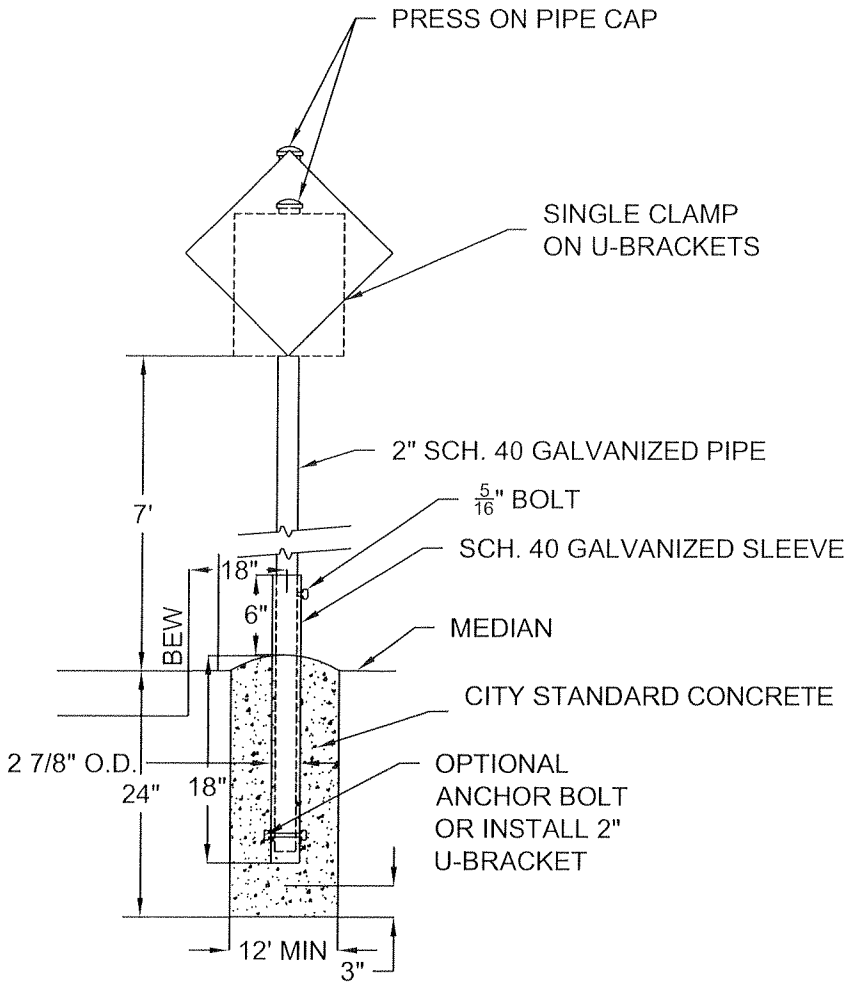

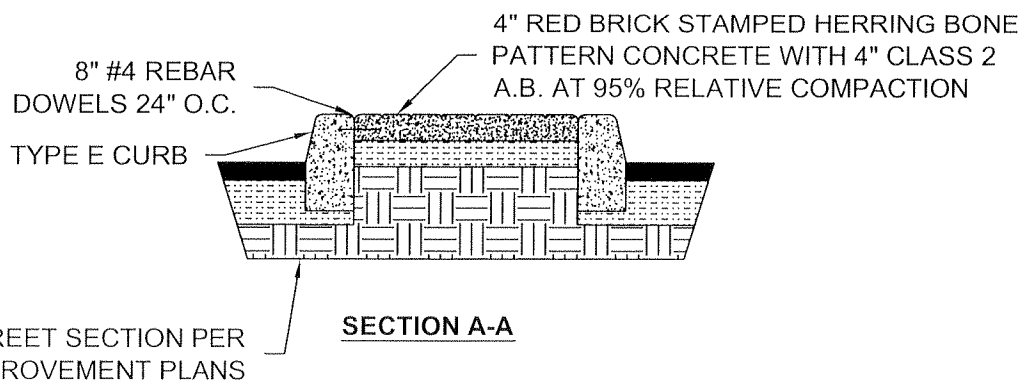

SECTION A-A

NOTES:

1. SIGN LOCATIONS TO BE DETERMINED BY THE CITY ENGINEER PRIOR TO PLACEMENT.
2. BACK BRACING REQUIRED FOR SIGNS LARGER THAN 18"x24" OR WHERE IDENTIFIED BY THE CITY ENGINEER.
3. ALL SIGNS SHALL BE HIGH-INTENSITY WITH GRAFFITI FILM.
4. ALL MOUNTING HARDWARE SHALL BE APPROVED BY THE CITY ENGINEER PRIOR TO INSTALLATION.

3230	MEDIAN SIGNS WITH "BREAK-AWAY"	REGISTERED PROFESSIONAL ENGINEER ... W. CUNNINGHAM No. C041983 EXP. 03/31/10 CIVIL STATE OF CALIFORNIA APPROVED: NOVEMBER 2009	CITY OF DIXON ENGINEERING STANDARD DETAIL

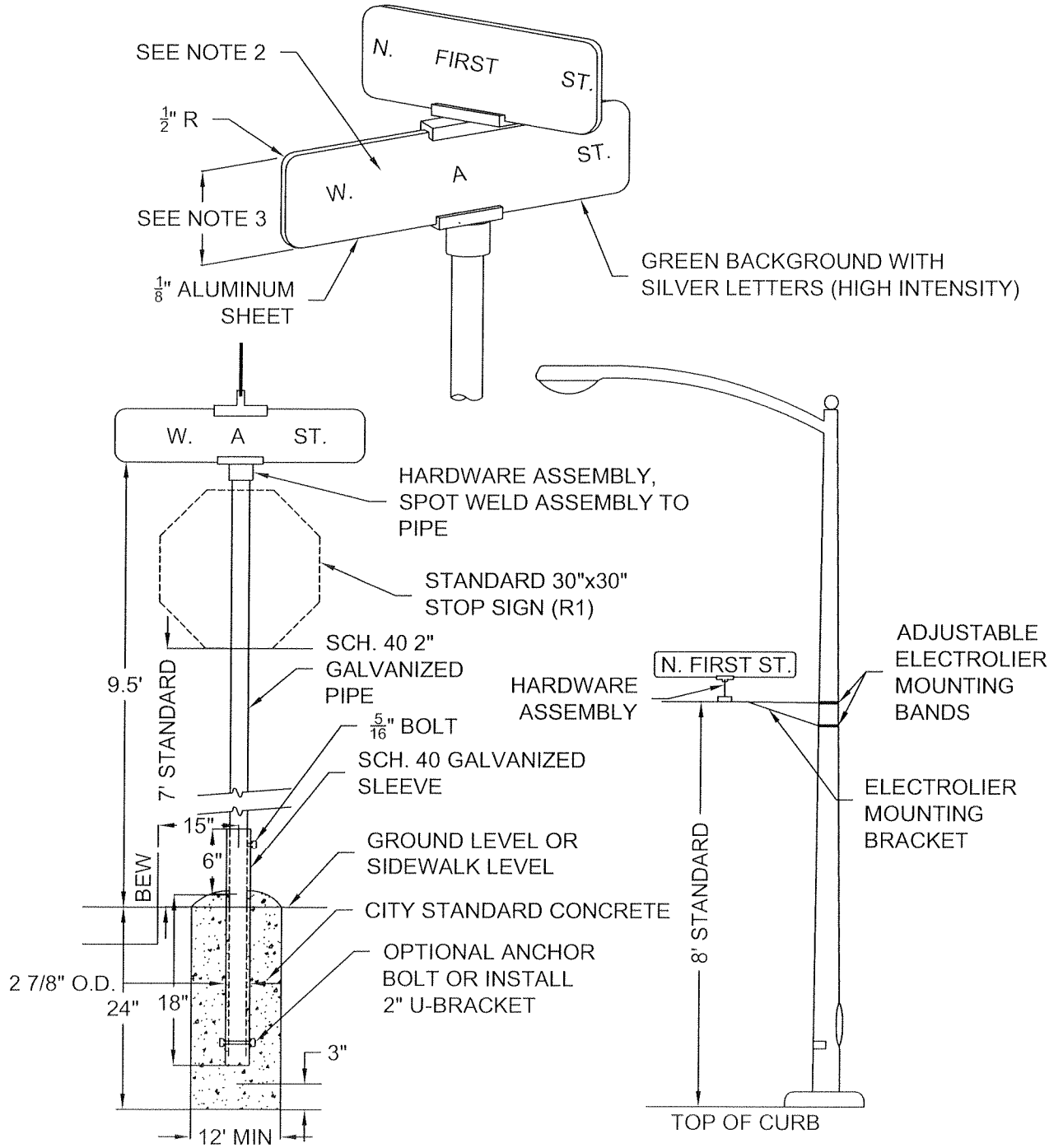

NOTES:

1. SIGN LOCATIONS TO BE DETERMINED BY THE CITY ENGINEER.
2. LETTERING SHALL BE 4" MONTEREY WITH 2" PREFIX AND SUFFIX FOR STREETS WITH SPEEDS LESS THAN 35 MPH. LETTERING SHALL BE 5" MONTEREY WITH 2.5" PREFIX AND SUFFIX FOR SPEEDS 35 MPH AND HIGHER.
3. PLATE SHALL BE 6" TALL FOR USE WITH 4" LETTERS AND 8" TALL FOR USE WITH 5" LETTERS.
4. SEE CS-20 "STREET NAME SIGNS" FOR DETAILS.
5. ALL MOUNTING HARDWARE SHALL BE APPROVED BY THE CITY ENGINEER PRIOR TO INSTALLATION.

DIXON CALIFORNIA — CITY OF DIXON ENGINEERING STANDARD DETAIL	REGISTERED PROFESSIONAL ENGINEER — JAMES W. CUNNINGHAM — No. C011985 — EXP. 03/31/10 — CIVIL — STATE OF CALIFORNIA APPROVED: NOVEMBER 2009	STREET NAME SIGN	3240

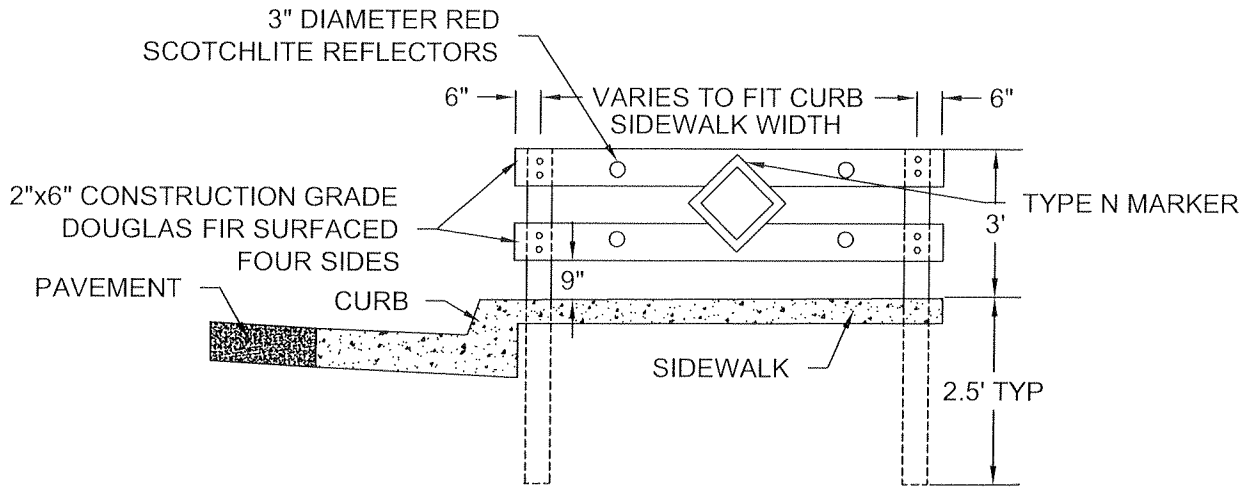

FRONT VIEW

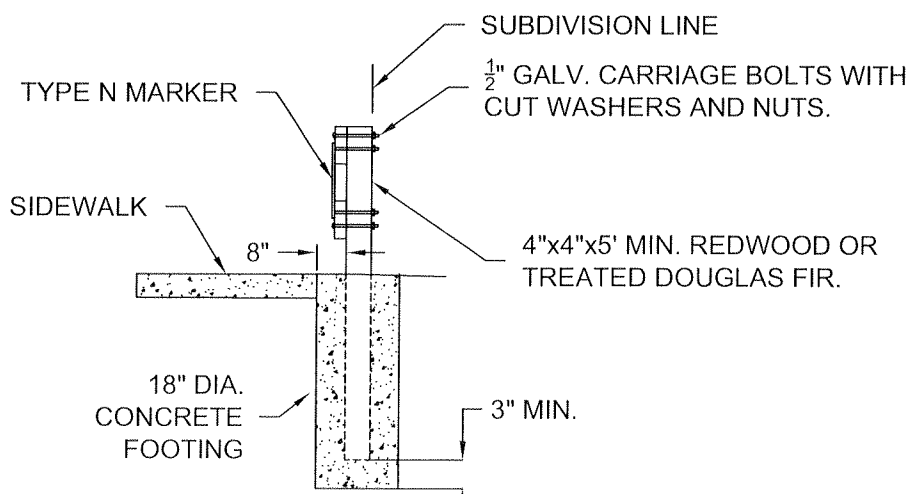

SIDE VIEW

NOTES:

1. SIDEWALK BARRICADES TO BE ERECTED AT EACH LOCATION WHERE SATISFACTORY PROVISION CANNOT BE MADE FOR PEDESTRIANS TO CONTINUE BEYOND THE TERMINUS OF A SIDEWALK.
2. ALL EXPOSED WOOD SURFACES SHALL BE PAINTED WITH (2) COATS OF WHITE PAINT CONFORMING TO STATE STANDARD SPECIFICATION 91-3.02.

3250	SIDEWALK BARRICADE	REGISTERED PROFESSIONAL ENGINEER LEONARD W. CUNNINGHAM No. C041983 EXP. 03/31/10 CIVIL STATE OF CALIFORNIA APPROVED: NOVEMBER 2009	CITY OF DIXON ENGINEERING STANDARD DETAIL DIXON CALIFORNIA

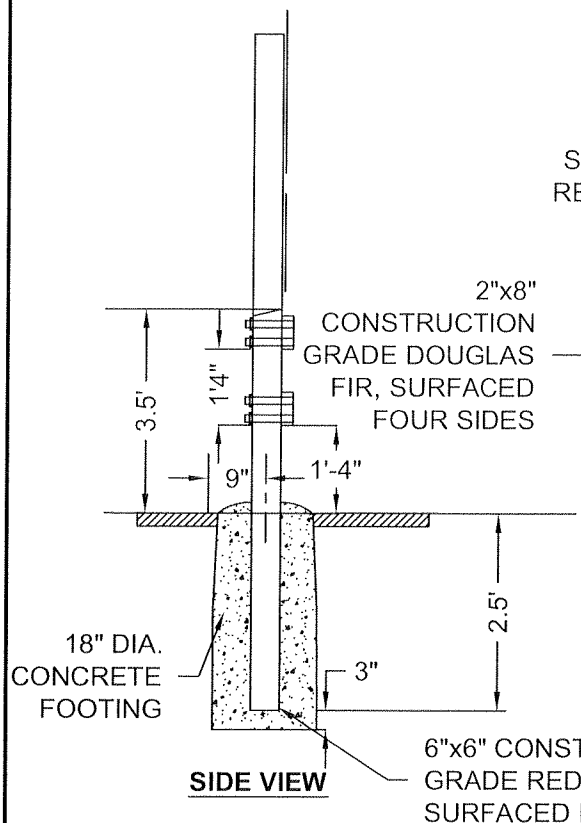

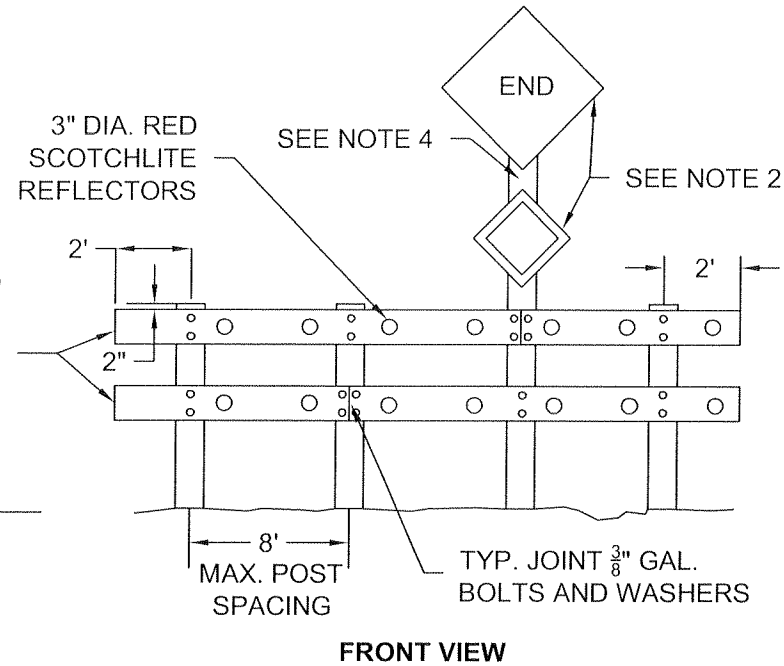

	NUMBER		SIZE		SIGN	
R/W	W31		TYPE N		C2 SIGN	
WIDTH	SIZE	NO.	SIZE	NO.	SIZE	NO.
≤ 50'	30"	1	18"	1	24"x36"	1
51'-75	30"	2	18"	2	30"x48"	1
>75'	30"	2	18"	2	30"x48"	1

NOTES:

1. AT STREET TERMINATION LOCATIONS, AS APPROVED BY THE CITY ENGINEER, A C2 "ROAD CLOSED" SIGN WILL BE REQUIRED ON THE CENTERLINE OF THE ROAD IN ADDITION TO THE W31 "END" SIGNS.
2. 30"x30" W31 SIGNS AND 18"x18" RED TYPED N MARKERS ARE REQUIRED.
3. ALL EXPOSED SURFACES SHALL BE PAINTED WITH TWO COATS OF WHITE PAINT CONFORMING TO THE STATE STANDARD SPECIFICATION 91-3.02 PRIOR TO PLACEMENT OF REFLECTORS.
4. PLACE POST AT OR NEAREST TO CENTER. EXTEND RIGHT HAD SIDE TO PROVIDE MOUNTING FOR SIGNS.
5. USE CITY STANDARD CONCRETE.

DIXON CALIFORNIA	CITY OF DIXON ENGINEERING STANDARD DETAIL	REGISTERED PROFESSIONAL ENGINEER STEVE W. CUNNINGHAM No. C041985 EXP. 03/31/10 CIVIL STATE OF CALIFORNIA APPROVED: NOVEMBER 2009	END OF STREET BARRICADE	3260

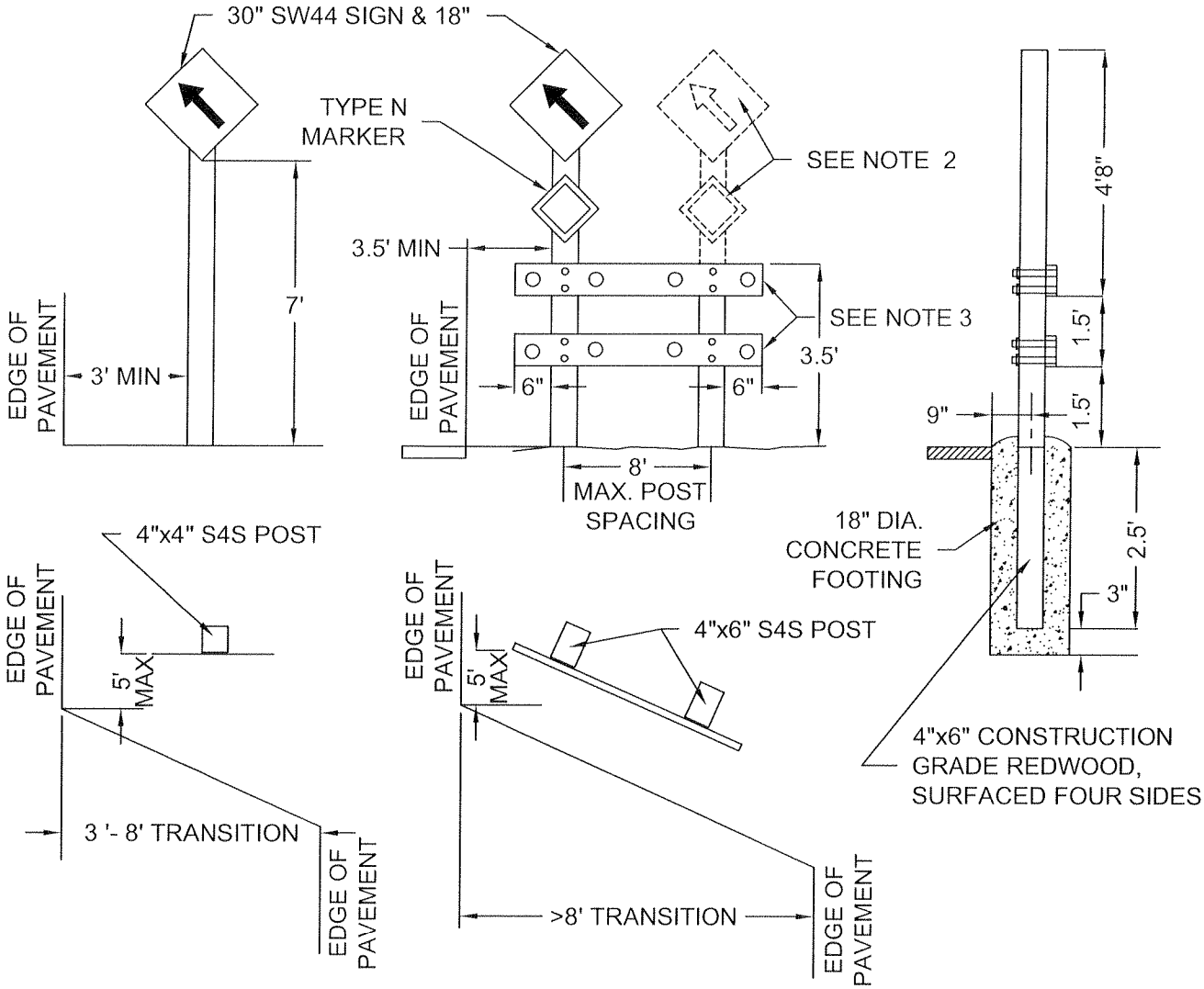

NOTES:

1. ALL EXPOSED WOOD SURFACES SHALL BE PAINTED WITH (2) COATS OF WHITE PAINT CONFORMING TO STATE STANDARD SPECIFICATION 91-3.02.
2. FOR TRANSITION GREATER THAN 18', A SECOND SW44 AND TYPE N MARKER SHALL BE REQUIRED ON THE EXTENSION OF THE SECOND POST FROM THE EDGE OF PAVEMENT.
3. 2"x18" CONSTRUCTION GRADE REDWOOD SURFACED FOUR SIDES.
4. USE CITY STANDARD CONCRETE.

3270	STREET TRANSITION SIGN & BARRICADE	REGISTERED PROFESSIONAL ENGINEER JAMES W. CUNNINGHAM No. C041983 EXP. 03/31/10 CIVIL STATE OF CALIFORNIA APPROVED: NOVEMBER 2009	CITY OF DIXON ENGINEERING STANDARD DETAIL

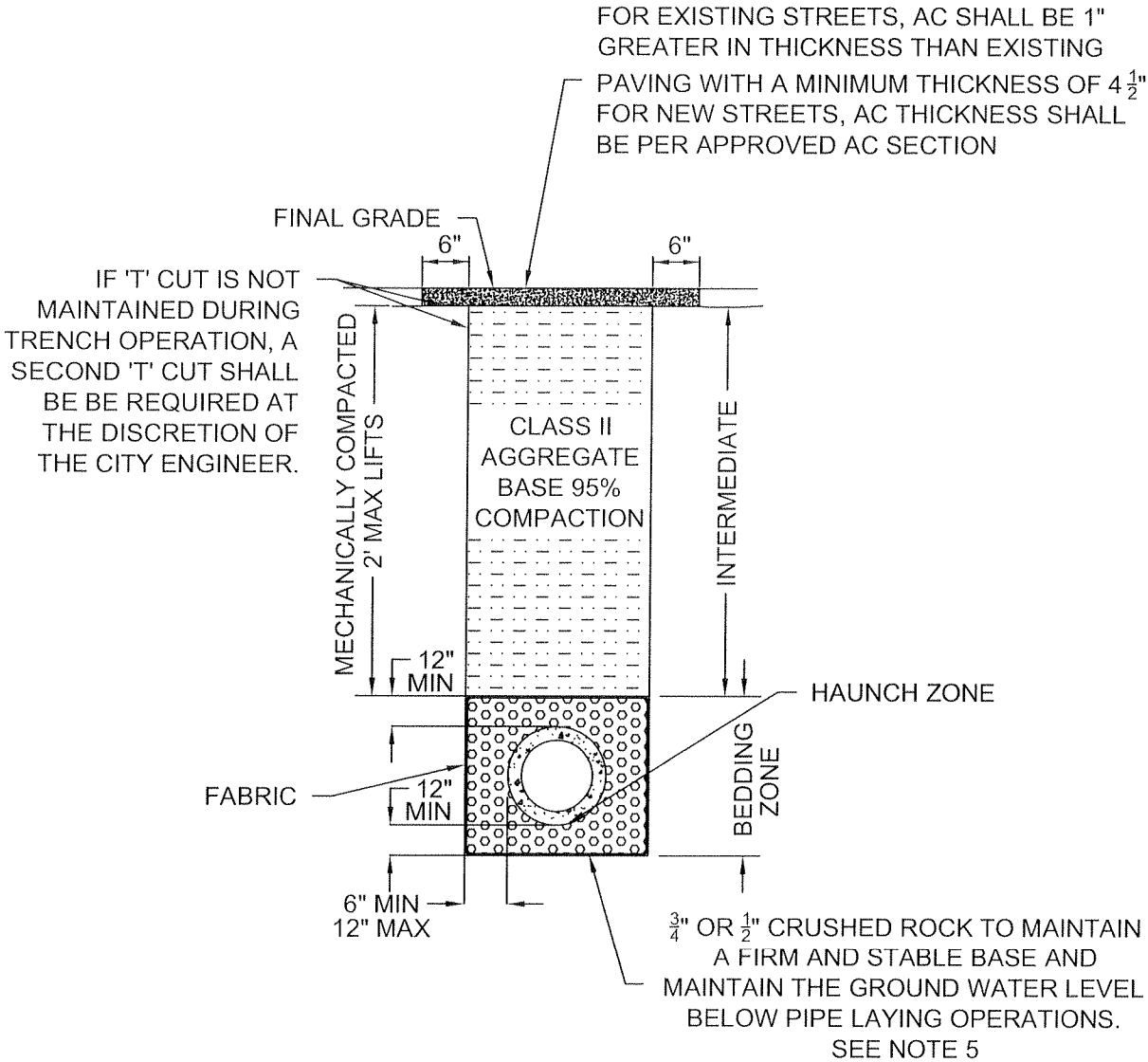

NOTES:

1. TEMPORARY CUTBACK SHALL BE PLACED IMMEDIATELY AFTER BACKFILL INSTEAD OF FINAL PAVING, TEMPORARY CUTBACK SHALL BE MAINTAINED BY THE CONTRACTOR UNTIL PERMANENT PAVING IS INSTALLED. PERMANENT PAVING TO BE INSTALLED NO LATER THAN 30 DAYS FOLLOWING BACKFILL OPERATION.
2. PRIOR TO PERMANENT PAVING, EXISTING A.C. SHALL BE SAWCUT TO A NEAT EDGE 6" ON EITHER SIDE AND SHALL BE TACKED PRIOR TO REPAVING.
3. FINAL TRENCH DETAIL DEPENDENT UPON DESIGN, PIPE MATERIAL AND SOIL CONDITIONS.
4. FINAL A.C. PAVING SHALL BE PLACED 1/8" ABOVE ADJACENT A.C. GRADE
5. BEDDING ZONE SHALL CONSIST OF 3/4" OR 1/2" CRUSHED ROCK AS PER ASTM C-12. CRUSHED ROCK SHALL BE PLACED IN A MANNER SUCH AS SHOVEL-SLICING SPADE OR SHOVEL RODDING TO ENSURE CONSOLIDATION OF HAUNCH ZONE BELOW SPRINGLINE OF THE PIPE.
6. INTERMEDIATE BACKFILL REQUIREMENTS SHALL BE AS SPECIFIED BY THE SOILS ENGINEER, OR THE DESIGN ENGINEER IN ACCORDANCE WITH THE SOIL REPORT, AS APPROVED BY THE CITY ENGINEER.
7. A 2-SACK SAND SLURRY BACKFILL MAY BE UTILIZED IN THE INTERMEDIATE ZONE AS APPROVED BY THE CITY ENGINEER.

DIXON CALIFORNIA CITY OF DIXON ENGINEERING STANDARD DETAIL	REGISTERED PROFESSIONAL ENGINEER PRINCE W. CUNNINGHAM No. C041983 EXP. 03/31/10 CIVIL STATE OF CALIFORNIA APPROVED: NOVEMBER 2009	TRENCH BACKFILL FOR CITY UTILITIES WITHIN PAVED AREA	3280

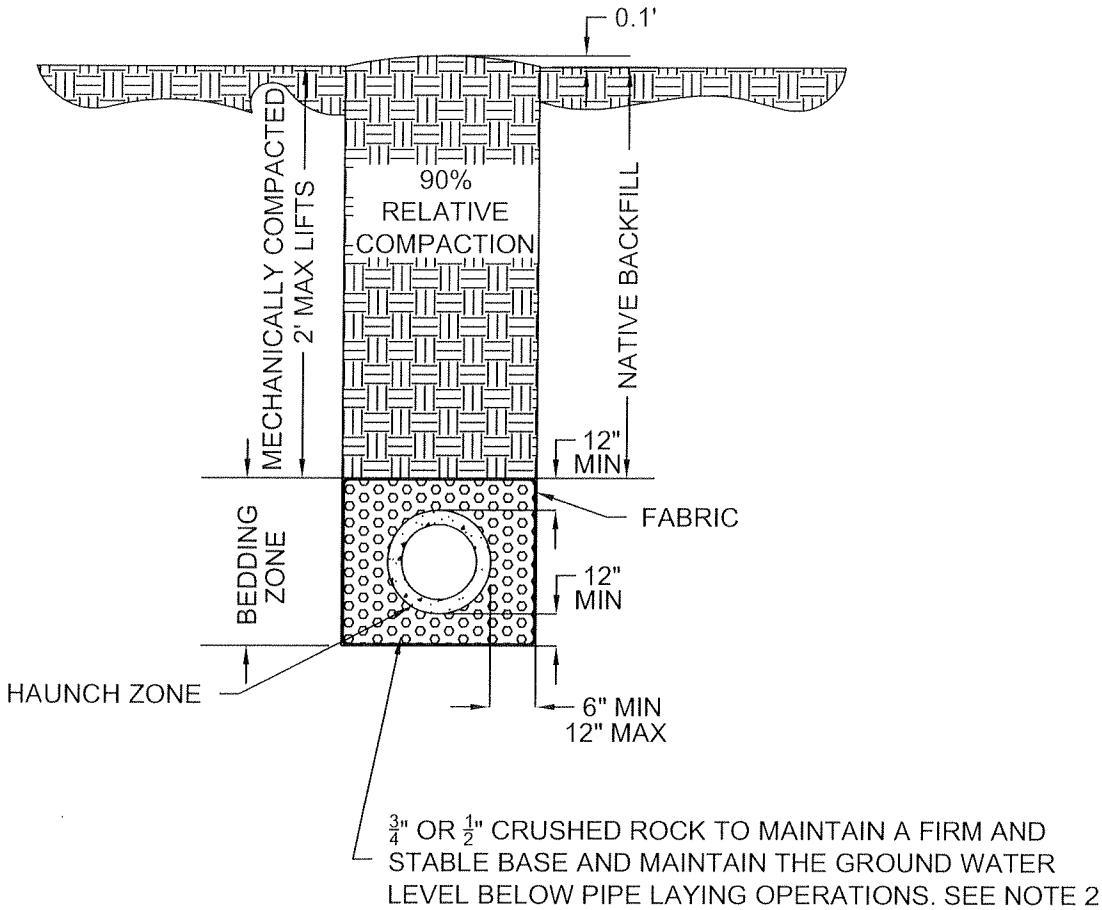

NOTES:

1. FINAL TRENCH DETAIL DEPENDENT UPON DESIGN, PIPE MATERIAL, AND SOIL CONDITIONS.
2. BEDDING ZONE SHALL CONSIST OF ¾" OR ½" CRUSHED ROCK AS PER ASTM-C-12. CRUSHED ROCK SHALL BE PLACED IN A MANNER SUCH AS SHOVEL-SLICING SPADE OR SHOVEL RODDING TO ENSURE CONSOLIDATION OF HAUNCH ZONE BELOW SPRINGLINE OF THE PIPE.

3290	TRENCH BACKFILL FOR CITY UTILITIES IN UNPAVED AREAS	REGISTERED PROFESSIONAL ENGINEER CHARLES W. CUNNINGHAM No. C041985 EXP. 03/31/10 CIVIL STATE OF CALIFORNIA APPROVED: NOVEMBER 2009	CITY OF DIXON ENGINEERING STANDARD DETAIL DIXON CALIFORNIA

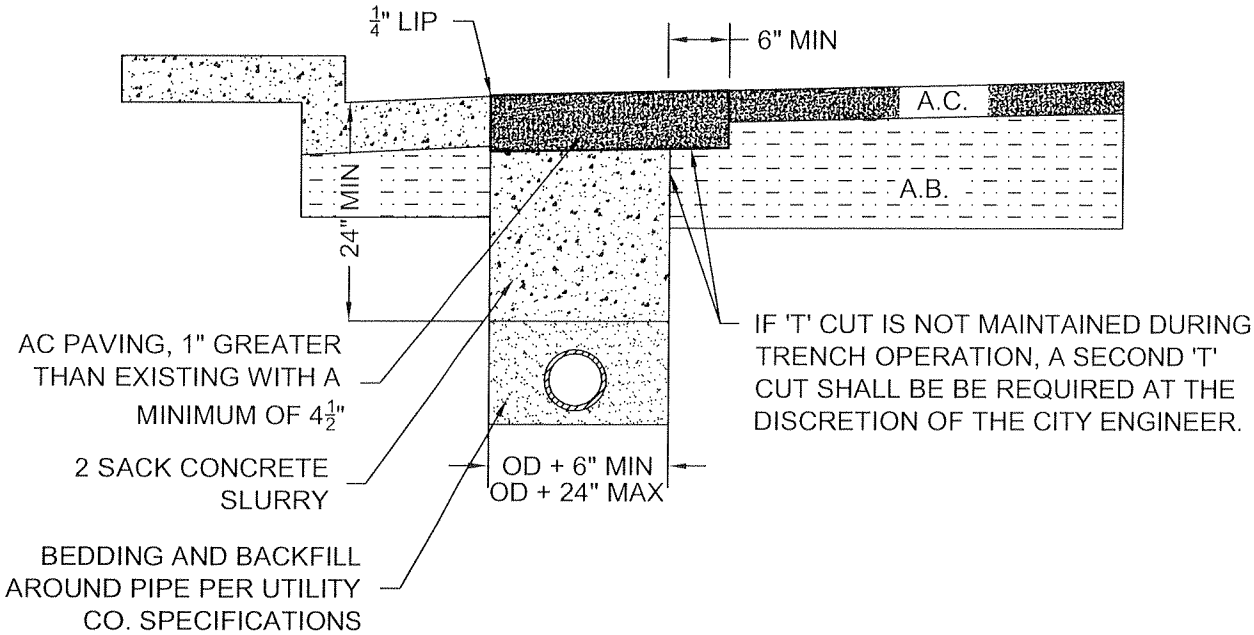

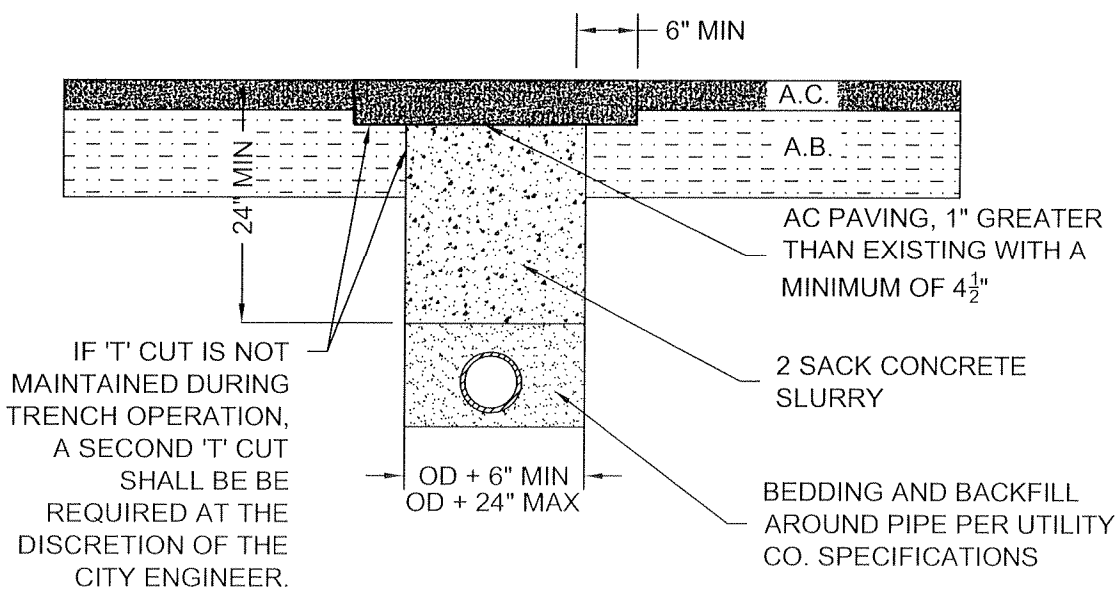

NOTES:

1. TEMPORARY CUTBACK SHALL BE PLACED IMMEDIATELY AFTER BACKFILL INSTEAD OF FINAL PAVING, TEMPORARY CUTBACK SHALL BE MAINTAINED BY THE CONTRACTOR UNTIL PERMANENT PAVING IS INSTALLED. PERMANENT PAVING TO BE INSTALLED NO LATER THAN 30 DAYS FOLLOWING BACKFILL OPERATION.
2. PRIOR TO PERMANENT PAVING, EXISTING A.C. SHALL BE SAWCUT TO A NEAT EDGE 6" ON EITHER SIDE AND SHALL BE TACKED PRIOR TO REPAVING.
3. FINAL A.C. PAVING SHALL BE PLACED $\frac{1}{8}$" ABOVE ADJACENT A.C. GRADE

DIXON CALIFORNIA CITY OF DIXON ENGINEERING STANDARD DETAIL	REGISTERED PROFESSIONAL ENGINEER CLAUDE W. CUNNINGHAM No. C041983 EXP. 03/31/10 CIVIL STATE OF CALIFORNIA APPROVED: NOVEMBER 2009	UTILITY TRENCH FOR NON-CITY UTILITIES	3300

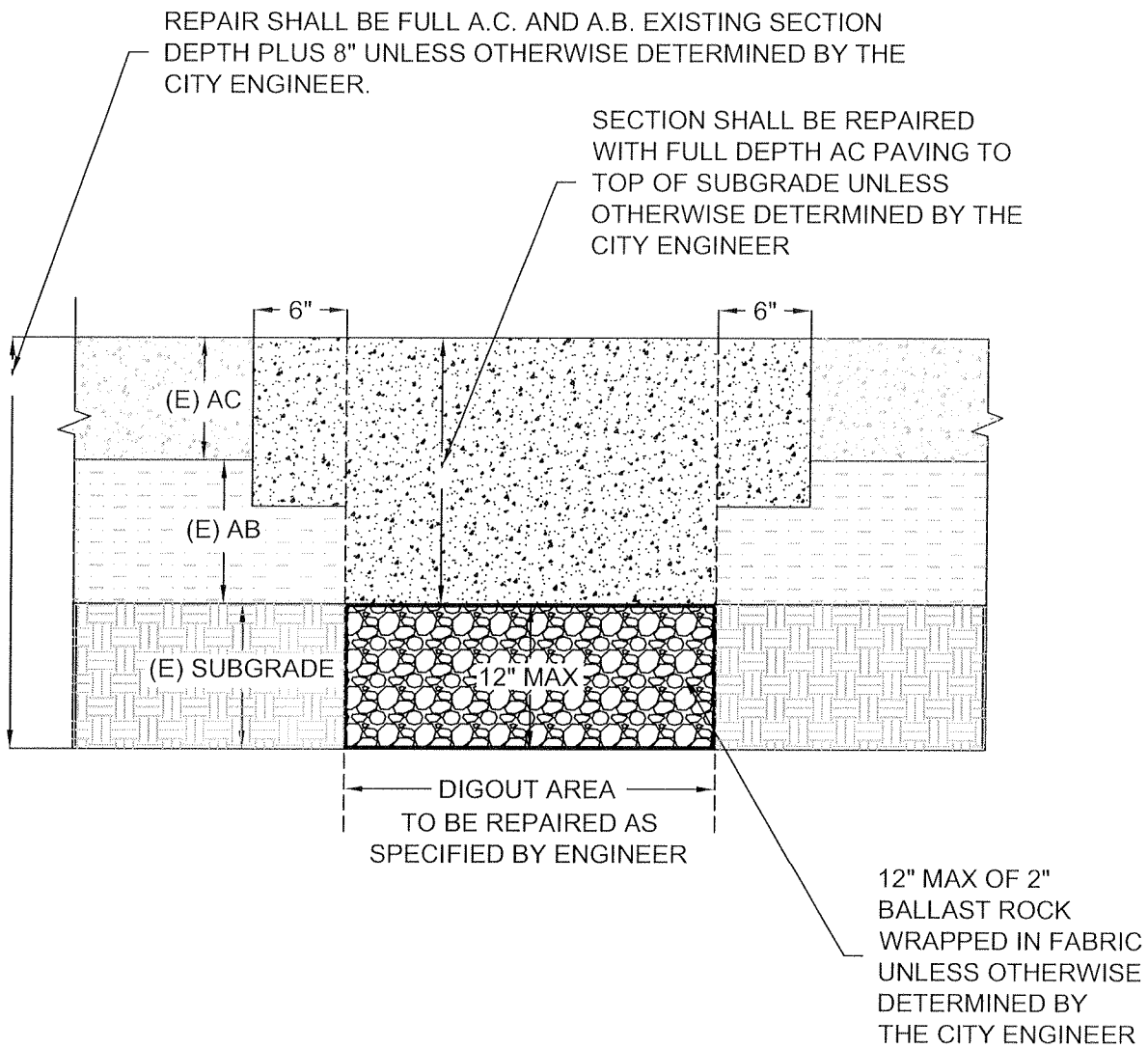

NOTES:

1. TEMPORARY CUTBACK SHALL BE PLACED IMMEDIATELY AFTER BACKFILL INSTEAD OF FINAL PAVING, TEMPORARY CUTBACK SHALL BE MAINTAINED BY THE CONTRACTOR UNTIL PERMANENT PAVING IS INSTALLED. PERMANENT PAVING TO BE INSTALLED NO LATER THAN 30 DAYS FOLLOWING BACKFILL OPERATION.
2. PRIOR TO PERMANENT PAVING, EXISTING A.C. SHALL BE SAWCUT TO A NEAT EDGE 6" ON EITHER SIDE AND SHALL BE TACKED PRIOR TO REPAVING.
3. FINAL A.C. PAVING SHALL BE PLACED $\frac{1}{8}$" ABOVE ADJACENT A.C. GRADE

3310	PAVEMENT DIGOUT REPAIR	REGISTERED PROFESSIONAL ENGINEER JEFFREY W. CUNNINGHAM No. C041985 EXP. 03/31/10 CIVIL STATE OF CALIFORNIA APPROVED: NOVEMBER 2009	CITY OF DIXON ENGINEERING STANDARD DETAIL DIXON CALIFORNIA

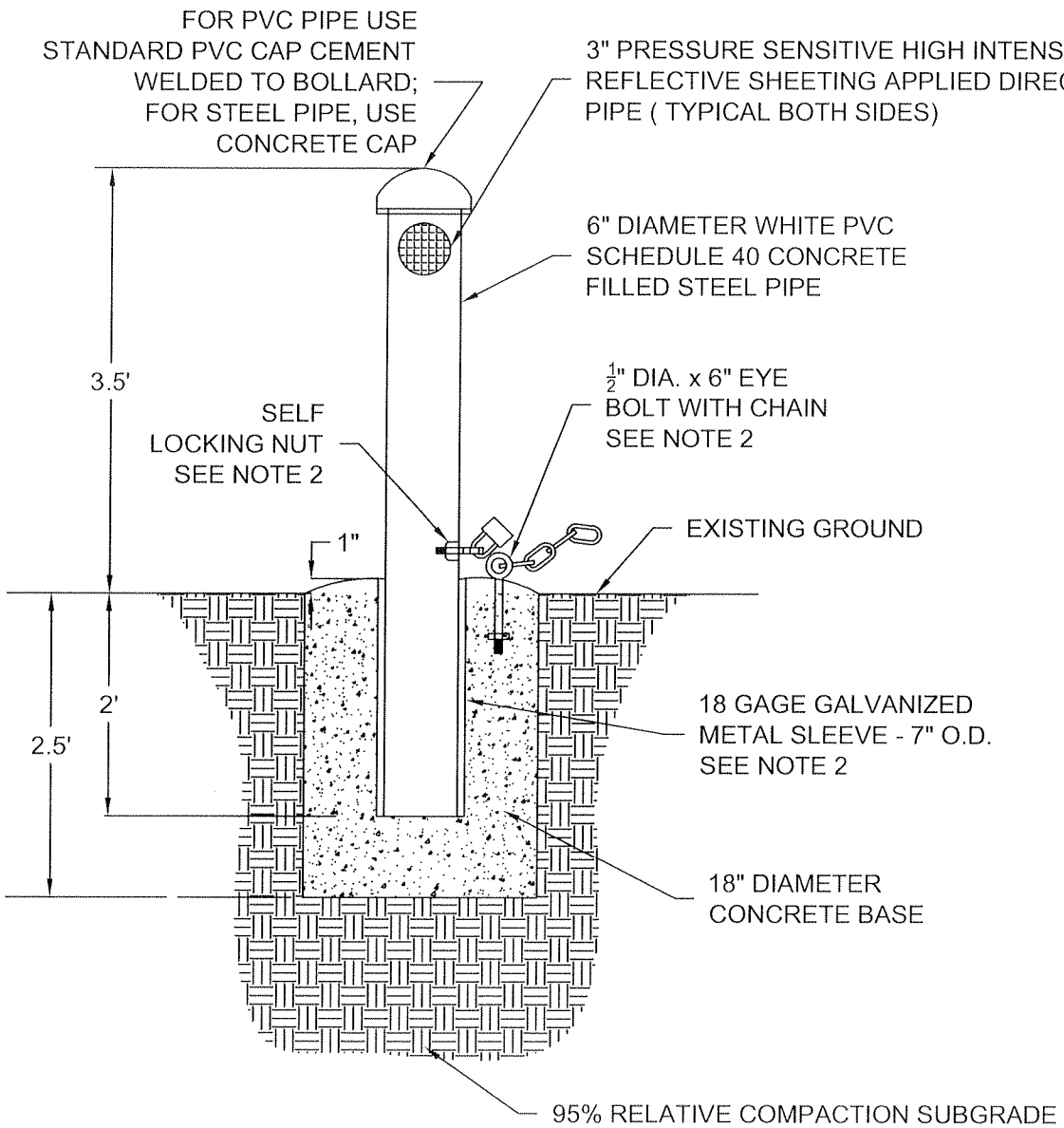

NOTES:

1. USE CITY STANDARD CONCRETE.
2. OMIT CHAIN LOCKING DEVICE & FOOTING SLEEVE WHEN INSTALLING CONCRETE FILLED STEEL PIPE BOLLARD.

CITY OF DIXON ENGINEERING STANDARD DETAIL	REGISTERED PROFESSIONAL ENGINEER No. C041985 EXP. 03/31/10 CIVIL STATE OF CALIFORNIA APPROVED: NOVEMBER 2009	PVC & CONCRETE FILLED STEEL PIPE BOLLARD	3320

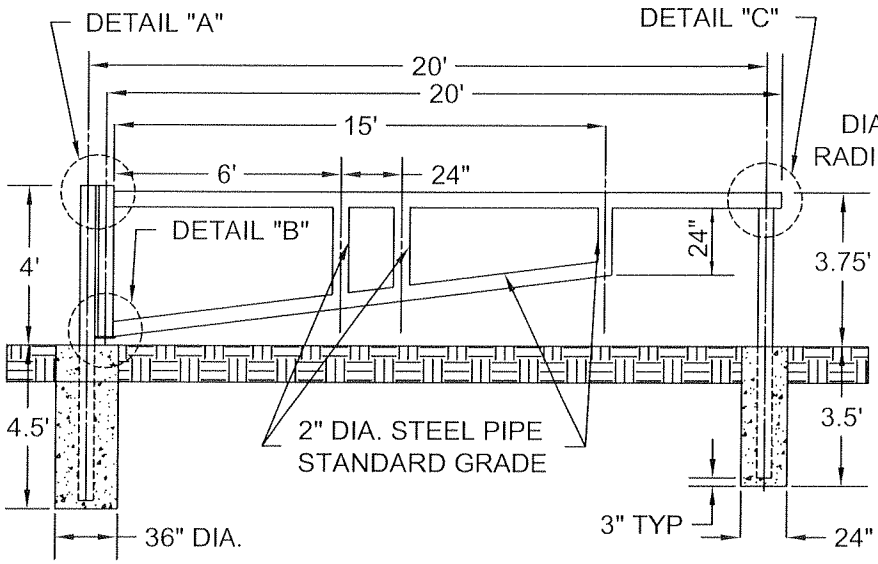

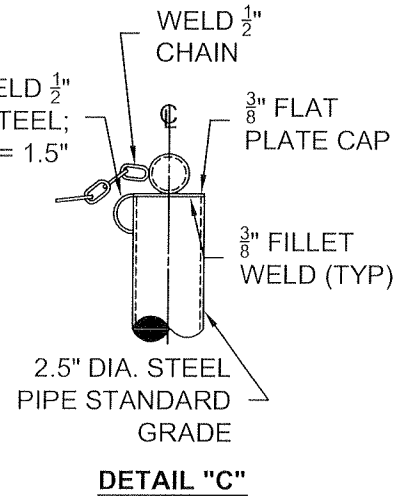

DETAIL "C"

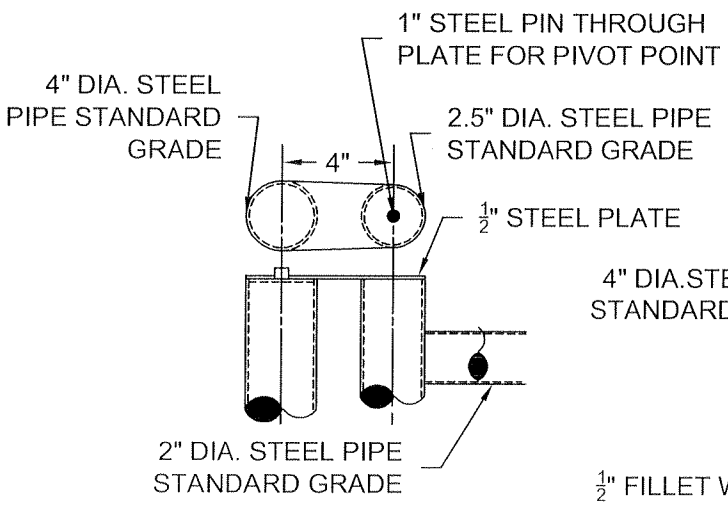

DETAIL "A"

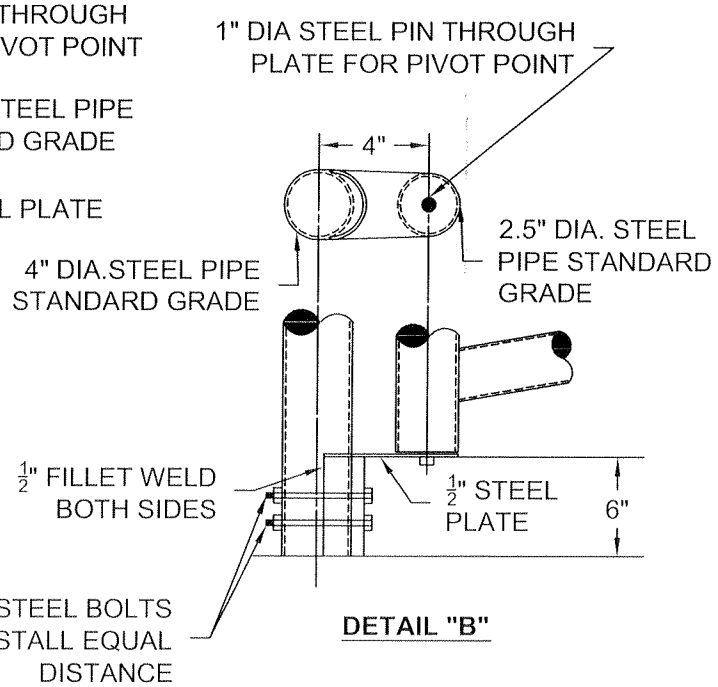

DETAIL "B"

NOTES:

1. USE CITY STANDARD CONCRETE.
2. ALL STEEL PIPE AND PLATES SHALL COMPLY WITH THE AMERICAN INSTITUTE OF STEEL CONSTRUCTION (AISC).
3. ACCESS GATE SHALL BE HOT-DIP GALVANIZED.
4. ALL WELDS SHALL BE FULL PENETRATION UNLESS SPECIFIED OTHERWISE.

3330	ACCESS GATE	REGISTERED PROFESSIONAL ENGINEER PRUCE W. CUNNINGHAM No. C041985 EXP. 03/31/10 CIVIL STATE OF CALIFORNIA APPROVED: NOVEMBER 2009	CITY OF DIXON ENGINEERING STANDARD DETAIL DIXON CALIFORNIA

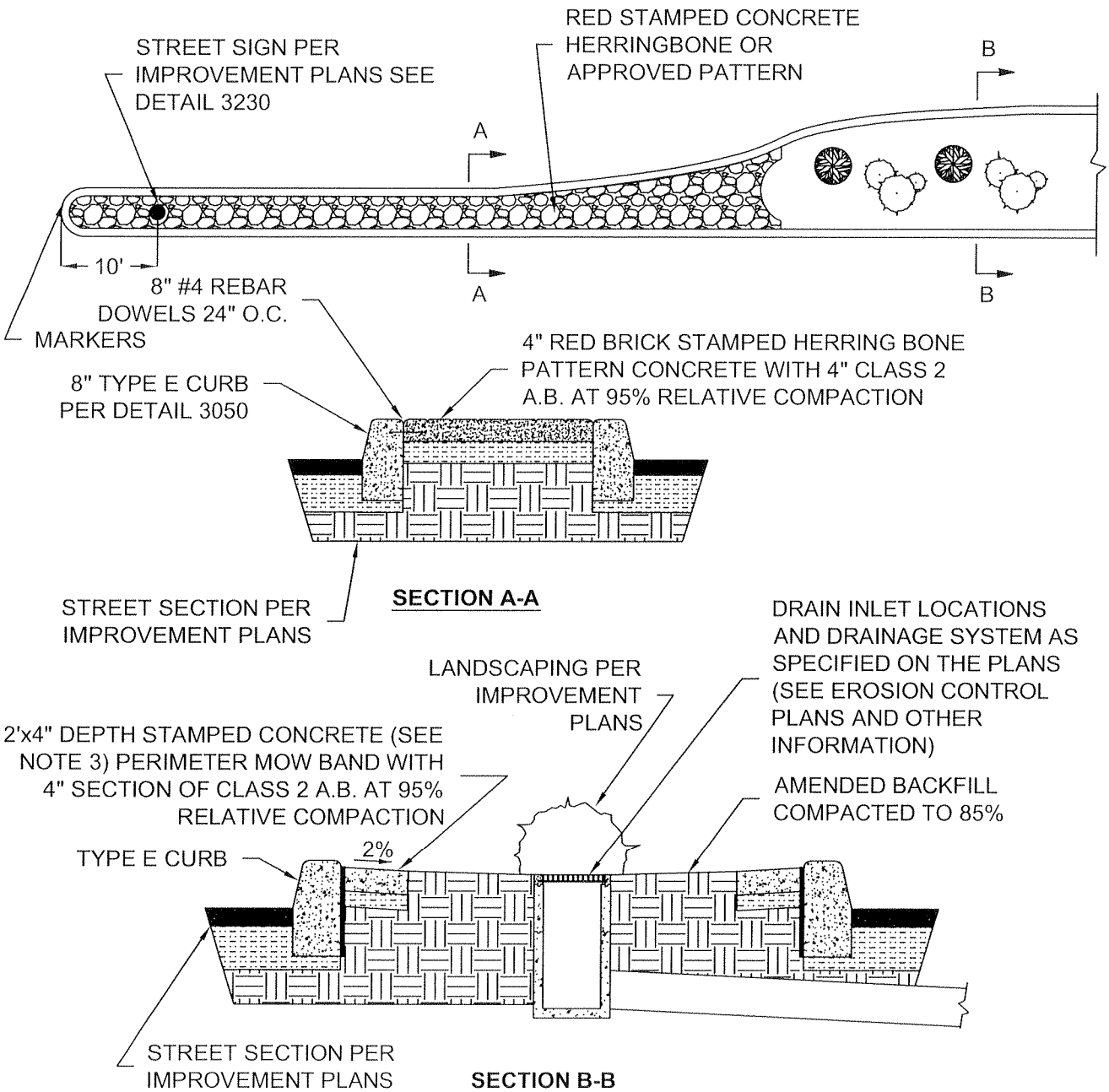

NOTES:

1. USE CITY STANDARD CONCRETE.
2. 6"x 6"x 10 GAUGE WIRE REINFORCEMENT REQUIRED FOR STAMPED CONCRETE.
3. 40 MIL. WATER STOP SHEET "DEEP ROOT" #WB24 OR APPROVED EQUAL INSTALL WATER STOP BELOW MOW BAND BY APPLYING ADHESIVE BETWEEN CURB AND WATER STOP. WATER STOP SHALL BE MINIMUM 24" DEPTH UNLESS SPECIFIED IN THE PLANS OR SPECIAL PROVISIONS/ SPECIFICATIONS.

DIXON CALIFORNIA CITY OF DIXON ENGINEERING STANDARD DETAIL	REGISTERED PROFESSIONAL ENGINEER BRUCE W. CUNNINGHAM No. C041985 EXP. 03/31/10 CIVIL STATE OF CALIFORNIA APPROVED: NOVEMBER 2009	MEDIAN ISLAND	3340

This Page Intentionally
Left Blank

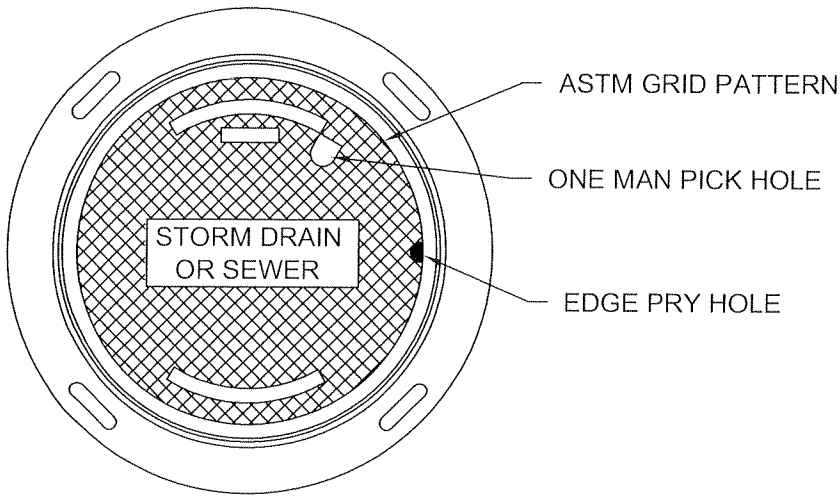

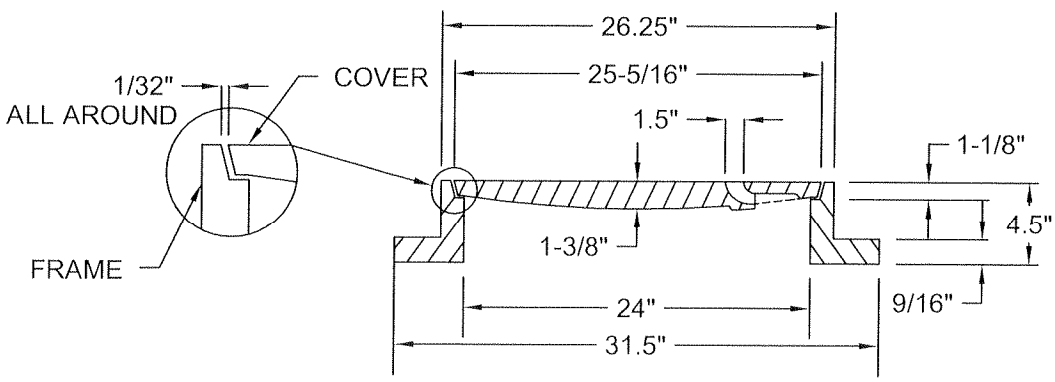

NOTES:

1. FRAME AND COVER FOR STORM DRAIN OR SEWER SHALL BE DESIGNED FOR H-20 HIGHWAY LOADING.
2. COVERS TO HAVE PICK HOLE AND EDGE PRY HOLE.
3. FRAME AND COVER TO BE SET 3/8" BELOW ROADWAY FINISH ELEVATION. SEE DETAIL 4010, 4020, 4030, 4040 OR 4500 FOR INSTALLATION DETAILS.
4. IN AREAS SUBJECT TO FLOODING, LOCKING/ BOLTED COVERS SHALL BE USED AT THE DISCRETION OF THE CITY ENGINEER.

DIXON CALIFORNIA CITY OF DIXON ENGINEERING STANDARD DETAIL	REGISTERED PROFESSIONAL ENGINEER W. CUNNINGHAM No.C041985 EXP. 03/31/10 CIVIL STATE OF CALIFORNIA APPROVED: NOVEMBER 2009	MANHOLE FRAME & COVER	4000

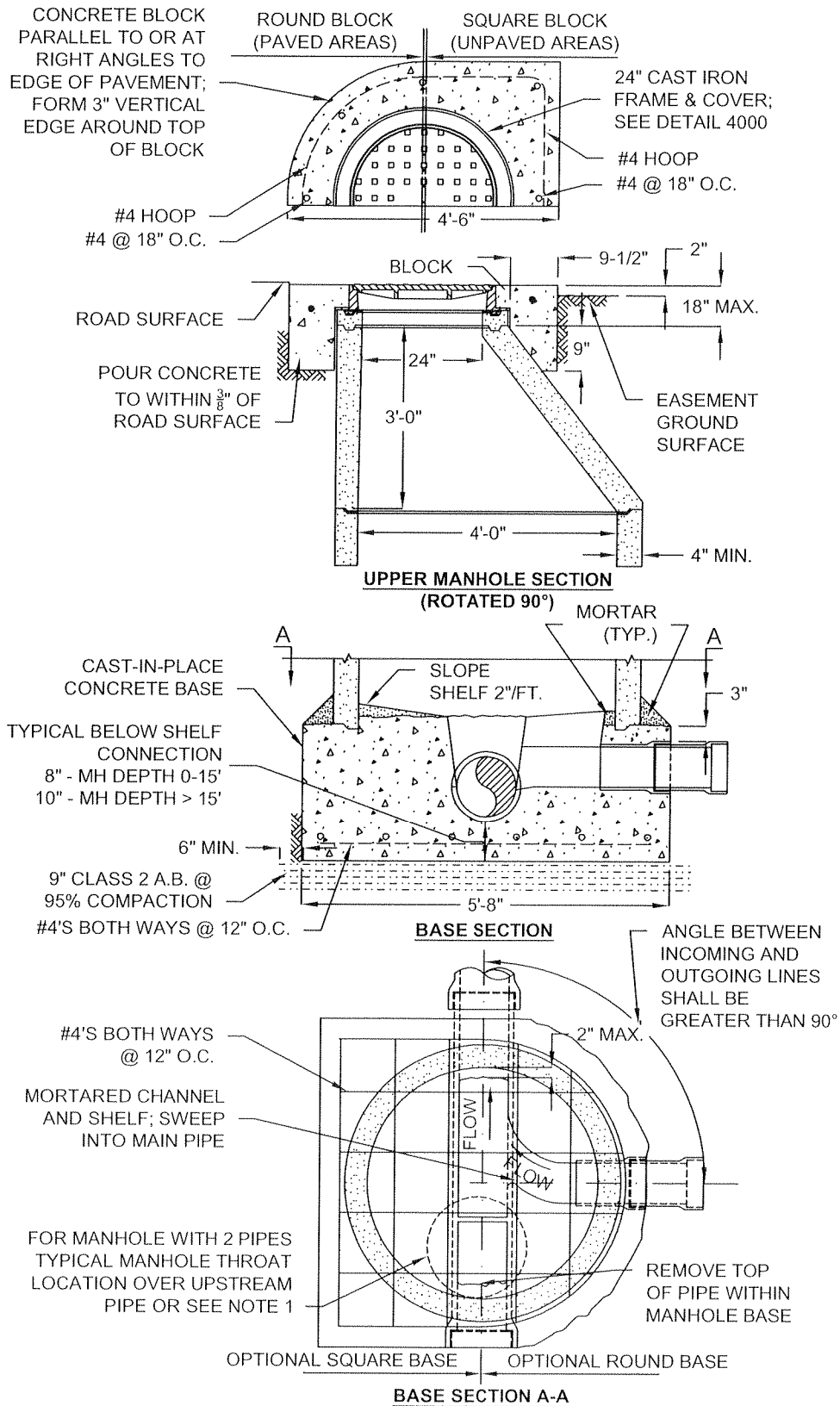

NOTES:

1. MANHOLES WITH ONE OR MORE SIDE SEWER SHALL HAVE CONCENTRIC CONES

2. LAY PIPE THRU MANHOLE WHEN POSSIBLE OR FORM CHANNEL TO MAINTAIN PIPE SECTION. SEWER PIPES ENTERING OR LEAVING THE MANHHOLE BASE SHALL HAVE A STANDARD JOINT LOCATED BETWEEN 12" AND 24" OF THE BASE.

3. ALL REINFORCEMENT STEEL SHALL BE 3" CLEAR.

4. BACKFILL SHALL BE PER DETAIL 3280 OR 3290.

5. IN AREAS SUBJECT TO FLOODING, LOCKING/ BOLTED COVERS SHALL BE USED.

6. COAT SANITARY SEWER MANHOLE WITH APPROVED H2S PROTECTIVE COATING. WATERPROOFING TREATMENT (XYPEX OR EQUAL) MAY BE USED IN LIEU OF H2S PROTECTION COATING AT THE DISCRETION OF THE CITY ENGINEER.

7. ALL JOINTS SHALL BE GROUTED BOTH INSIDE AND OUTSIDE.

8. PIPE JOINT SHALL BE LOCATED BETWEEN 1' TO 2' FROM MANHOLE.

9. NO WYE OR TEE FITTING SHALL BE INSTALLED WITHIN 12" OF THE STRUCTURE. AN APPROVED REPAIR COUPLING MAY BE USED BETWEEN THE STRUCTURE AND THE NEXT DOWNSTREAM PIPE WHEN WYE OR TEE FITTING IS BEING INSTALLED.

10. SLOPE BLOCK OR AC TO DRAIN AWAY FROM MANHOLE RIM (2% MAX.).

4010	MANHOLE FOR PIPES LESS THAN 24"	REGISTERED PROFESSIONAL ENGINEER JAMES W. CUNNINGHAM No.C011985 EXP. 03/31/10 CIVIL STATE OF CALIFORNIA APPROVED: NOVEMBER 2009	CITY OF DIXON ENGINEERING STANDARD DETAIL DIXON CALIFORNIA

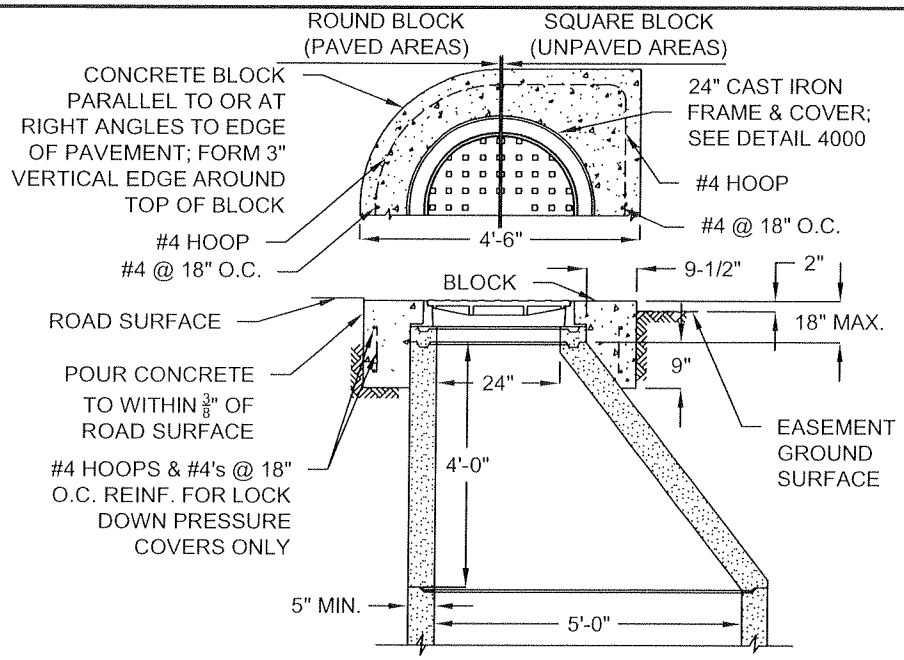

UPPER SECTION
(ROTATED 90°)

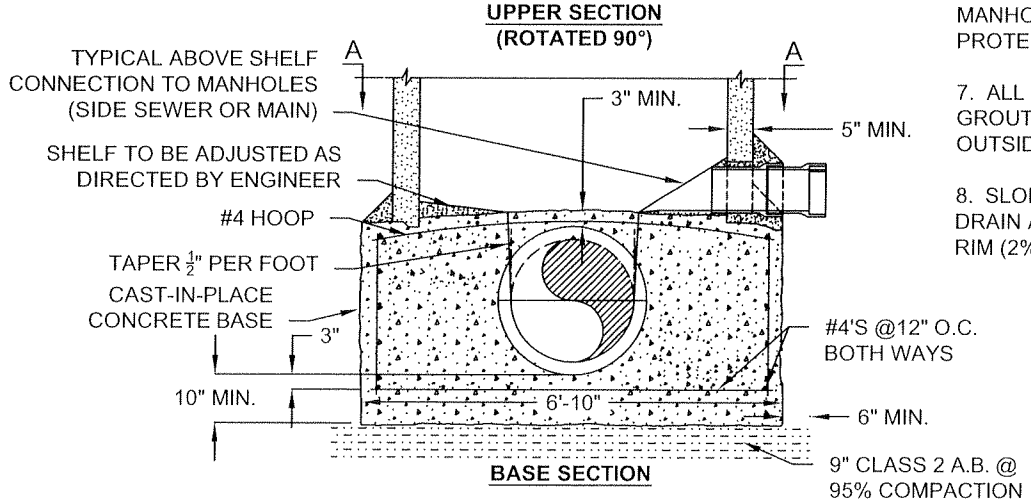

BASE SECTION

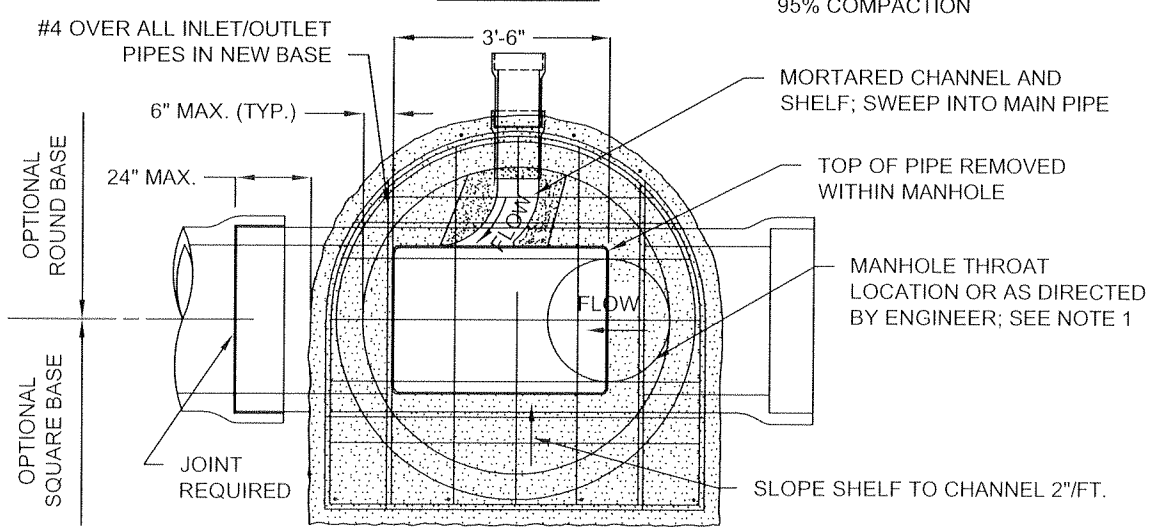

BASE SECTION A-A
(ROTATED 90°)

NOTES:

1. MANHOLES WITH ONE OR MORE SIDE SEWER SHALL HAVE CONCENTRIC CONES

2. LAY PIPE THRU MANHOLE WHEN POSSIBLE OR FORM CHANNEL TO MAINTAIN PIPE SECTION. SEWER PIPES ENTERING OR LEAVING THE MANHHOLE BASE SHALL HAVE A STANDARD JOINT LOCATED WITHIN 24" OF THE BASE.

3. ALL REINFORCEMENT STEEL SHALL BE 3" CLEAR.

4. BACKFILL SHALL BE PER DETAIL 3280 OR 3290.

5. IN AREAS SUBJECT TO FLOODING, LOCKING/ BOLTED COVERS SHALL BE USED.

6. COAT SANITARY SEWER MANHOLE WITH H2S PROTECTIVE COATING.

7. ALL JOINTS SHALL BE GROUTED BOTH INSIDE AND OUTSIDE.

8. SLOPE BLOCK OR AC TO DRAIN AWAY FROM MANHOLE RIM (2% MAX.)

DIXON CALIFORNIA	CITY OF DIXON ENGINEERING STANDARD DETAIL	REGISTERED PROFESSIONAL ENGINEER W. CUNNINGHAM No.C041985 EXP. 03/31/10 CIVIL STATE OF CALIFORNIA APPROVED: NOVEMBER 2009	MANHOLE FOR PIPES 24" TO 48" DIAMETER	4020

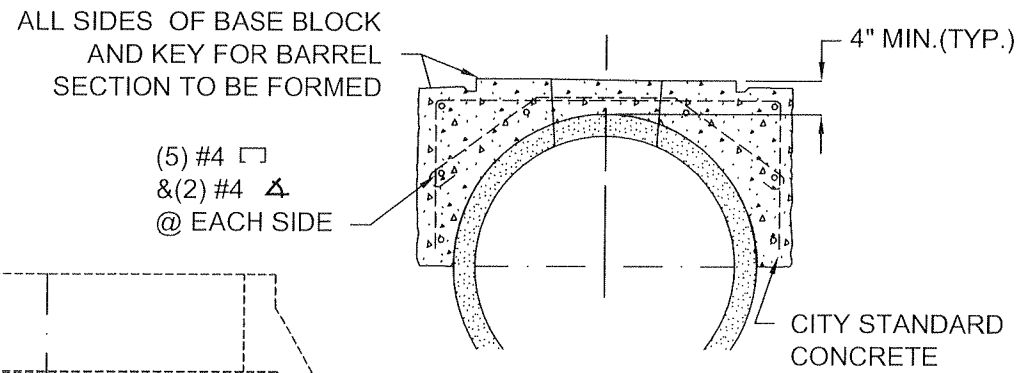

SECTION - BASE BLOCK

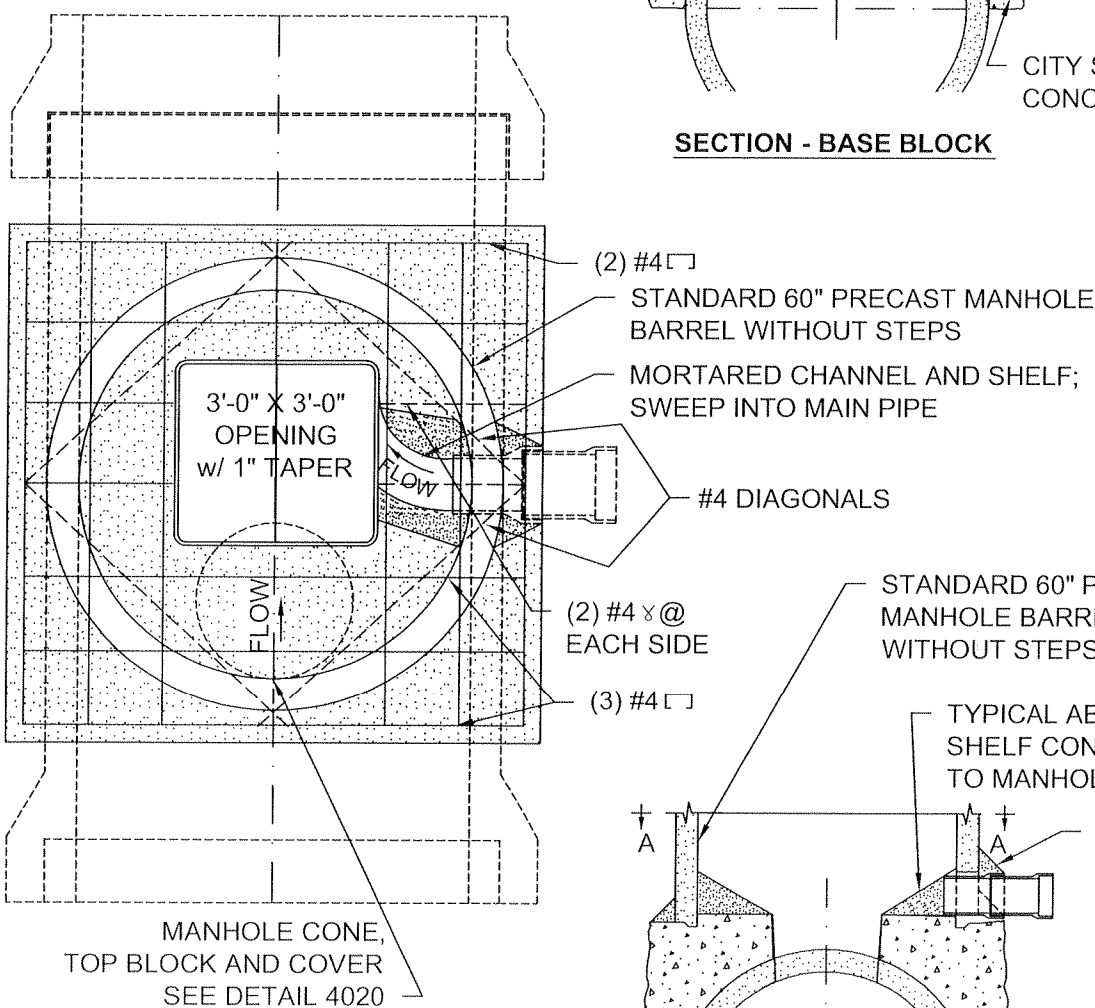

BASE SECTION A-A

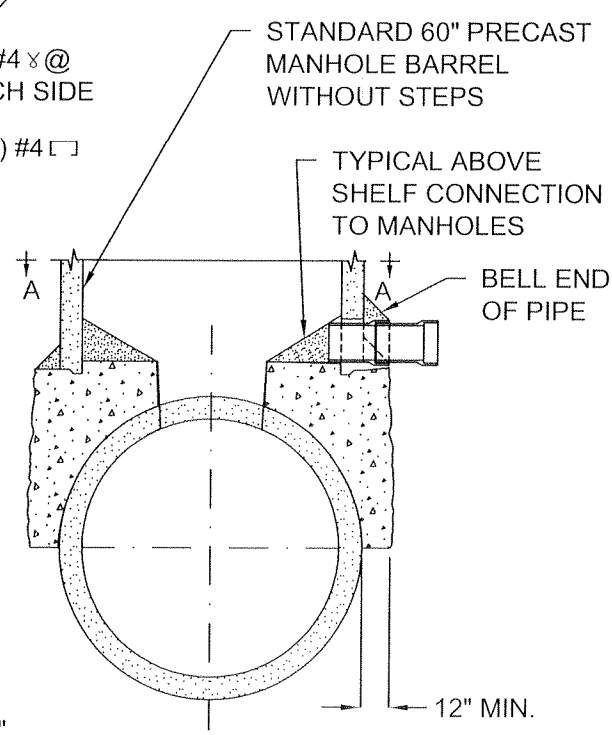

SECTION - TYPICAL

NOTE:
1. ALL STEEL REINFORCING SHALL BE #4 WITH 2" CLEAR MINIMUM CONCRETE COVER.
2. BACKFILL SHALL BE PER DETAIL 3230 OR 3250.

4030	SADDLE MANHOLE FOR PIPES 48" DIA. OR LARGER	REGISTERED PROFESSIONAL ENGINEER LEWIS W. CUNNINGHAM No. C041983 EXP. 03/31/10 CIVIL STATE OF CALIFORNIA APPROVED: NOVEMBER 2009	CITY OF DIXON ENGINEERING STANDARD DETAIL DIXON CALIFORNIA

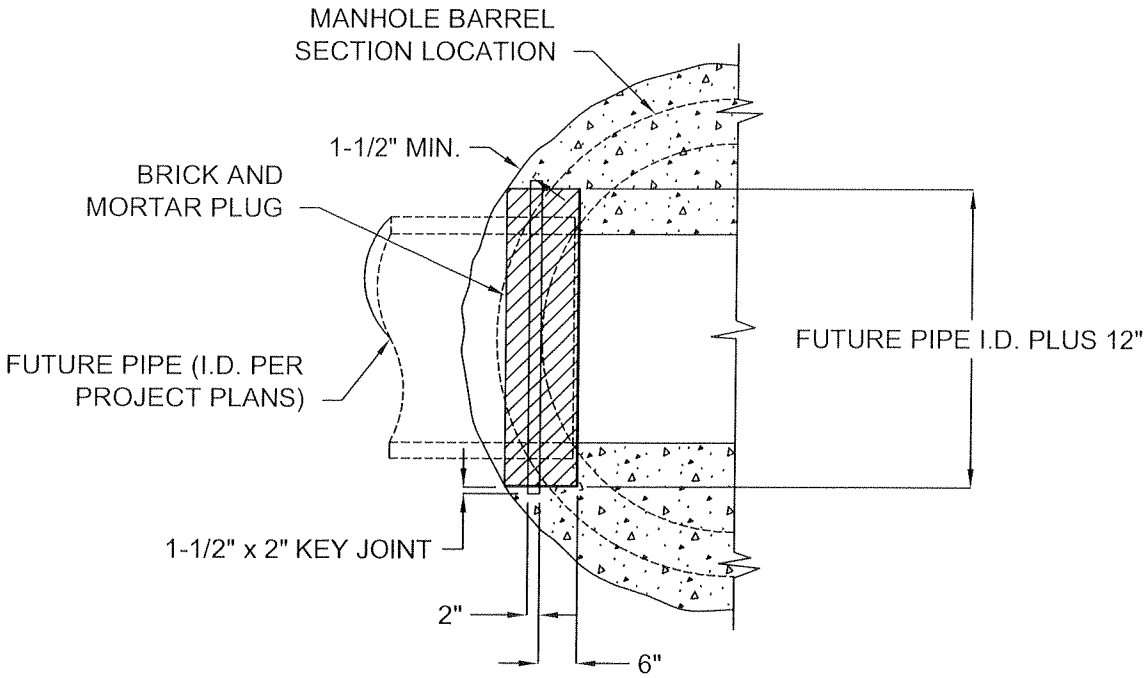

PLAN VIEW

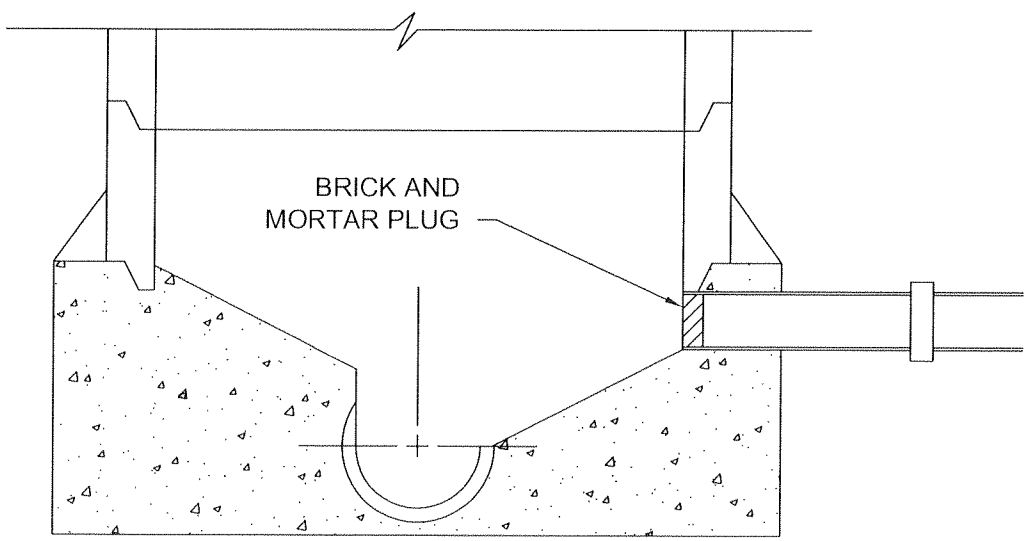

PROFILE VIEW

DIXON CALIFORNIA CITY OF DIXON ENGINEERING STANDARD DETAIL	REGISTERED PROFESSIONAL ENGINEER No. C041985 EXP. 03/31/10 CIVIL STATE OF CALIFORNIA APPROVED: NOVEMBER 2009	MANHOLE PLUG FOR FUTURE PIPE	4040

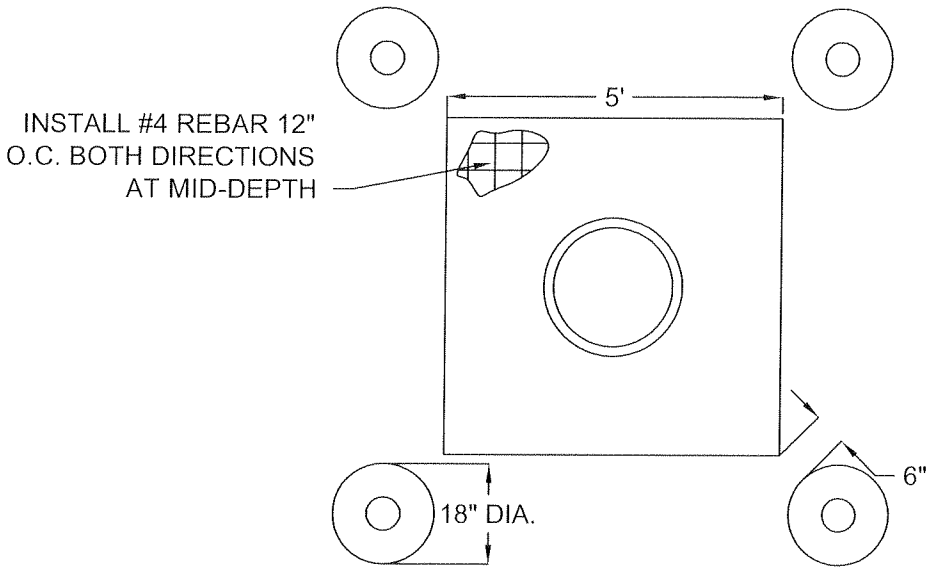

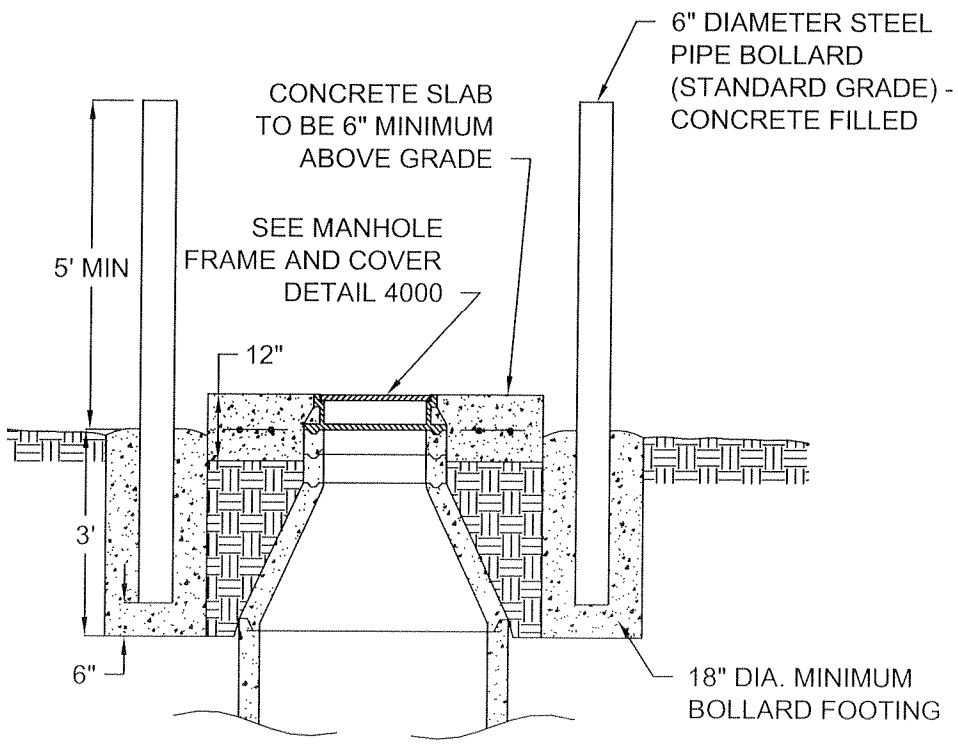

NOTES:

1. USE CITY STANDARD CONCRETE.
2. ALL STEEL PIPE AND PLATES SHALL COMPLY WITH THE AMERICAN INSTITUTE OF STEEL CONSTRUCTION (AISC).
3. STEEL PIPE SHALL HAVE TWO COATS OF CORROSION RESISTANT PAINT.

4050	UNIMPROVED AREA MANHOLE FRAME & BOLLARDS	REGISTERED PROFESSIONAL ENGINEER DEBBIE W. CUNNINGHAM No. C041983 EXP. 03/31/10 CIVIL STATE OF CALIFORNIA APPROVED: NOVEMBER 2009	CITY OF DIXON ENGINEERING STANDARD DETAIL

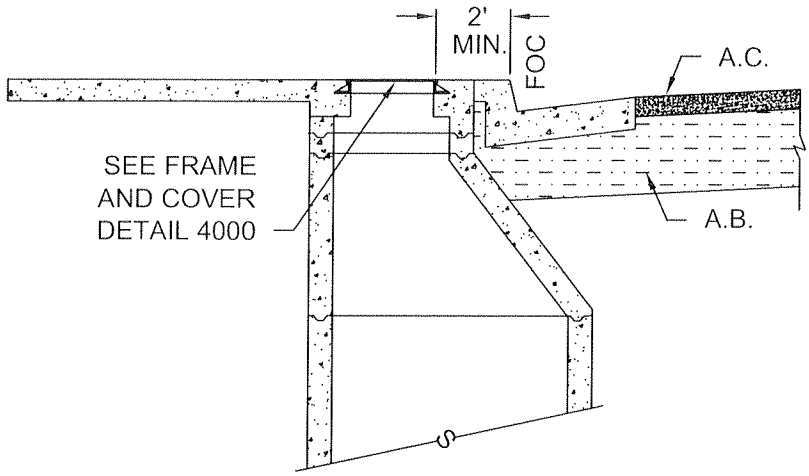

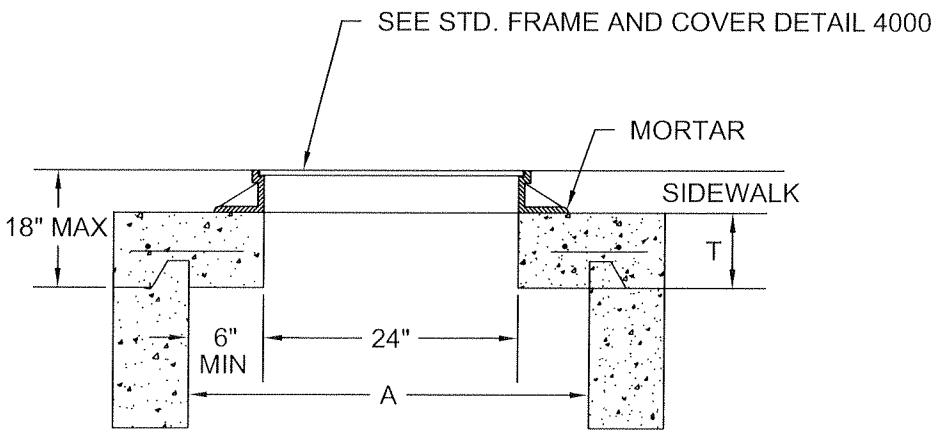

FLAT SLAB SHALL BE USED WHEN DEPTH
DOES NOT PERMIT USE OF TAPER UNIT

TABLE OF DIMENSIONS

M.H.	A	T MIN
48"	48"	6"
60"	60"	8"
72"	72"	8"

RISER SECTIONS, CONES AND ADJUSTING RINGS SHALL CONFORM TO ASTM DESIGNATION C-478

FRAME SHALL BE SECURED TO RISER OR FLAT SLAB TOP WITH CEMENT MORTAR

DIXON CALIFORNIA CITY OF DIXON ENGINEERING STANDARD DETAIL	REGISTERED PROFESSIONAL ENGINEER GREG W. CUNNINGHAM No. C041985 EXP. 03/31/10 CIVIL STATE OF CALIFORNIA APPROVED: NOVEMBER 2009	STORM DRAIN MANHOLE INSTALLATION IN SIDEWALK	4500

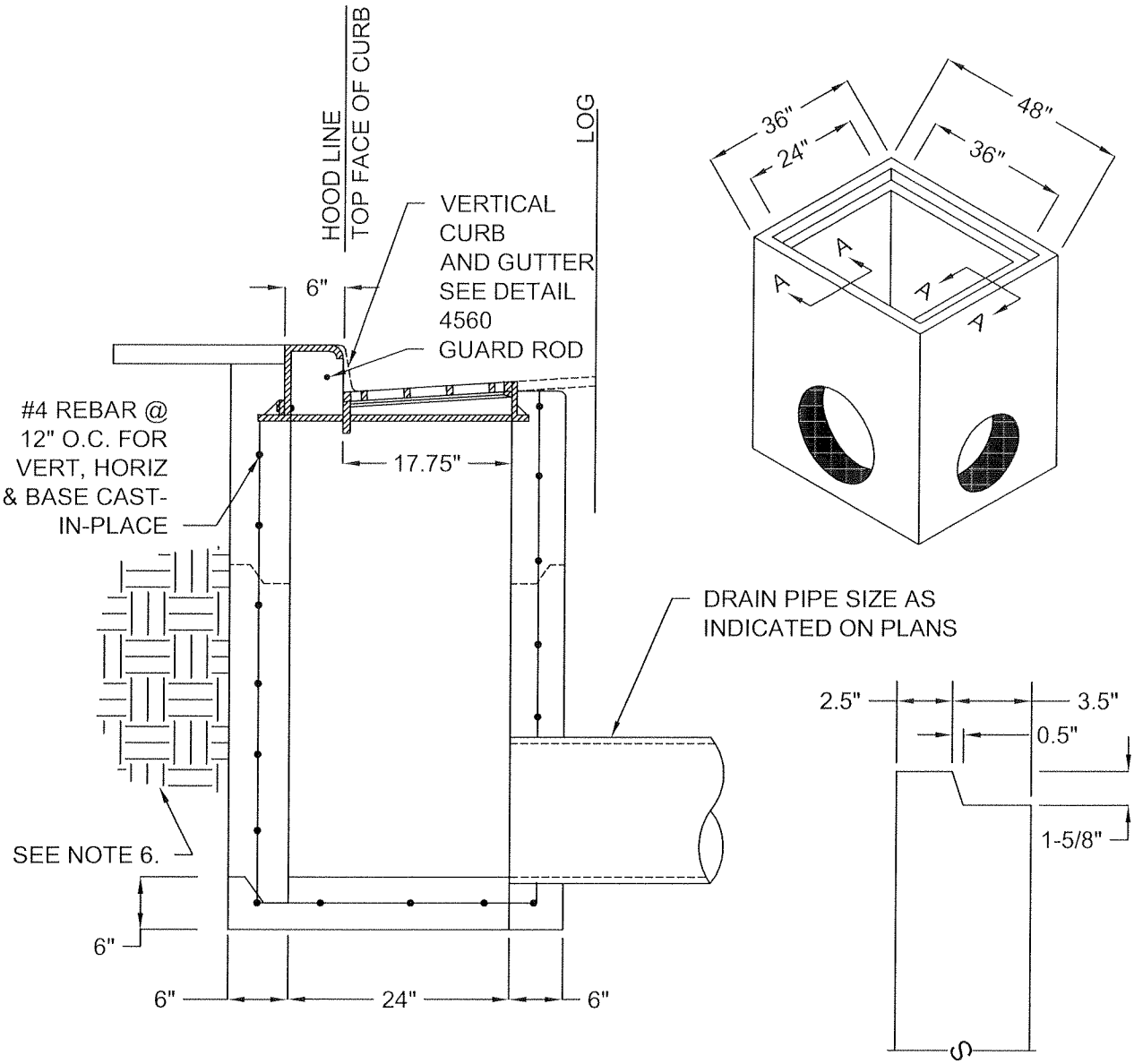

SECTION A-A

NOTES:

1. BASE MAY BE CAST-IN-PLACE OR PRECAST CONSTRUCTION.
2. PRECAST CATCH BASIN BASE SHALL BE JENSEN PRECAST MODEL #2436 OR APPROVED EQUAL
3. CAST-IN-PLACE WALLS AND BASE SHALL BE REINFORCED WITH #4 REBAR @ 12" O.C. WALLS SECTION SHALL IN NO CASE EXCEED 10" IN WIDTH.
4. CATCH BASIN FRAME, GRATE AND HOOD SHALL BE SOUTH BAY FOUNDRY MODEL #SBF 1947 WITH VANE GRATE AND GUARD ROD, OR APPROVED EQUAL. THE INLET FRAME AND HOOD SHALL BE BOLTED TOGETHER ALLOWING A ONE PIECE INSTALLATION.
5. VANE GRATES SHALL BE CONSTRUCTED TO RECEIVE WATER EITHER FROM ONE OR TWO DIRECTIONS DEPENDING ON GUTTER FLOW LINE DIRECTION.
6. 95% RELATIVE COMPACTION FOR APPROVED BACKFILL SHALL BE INSTALLED AROUND PERIMETER OF BASIN WHEN PRECAST IS USED.

4510	STORM DRAIN CURB INLET TYPE A PIPES < 24"	REGISTERED PROFESSIONAL ENGINEER PAUL W. CUNNINGHAM No. C041985 EXP. 03/31/10 CIVIL STATE OF CALIFORNIA APPROVED: NOVEMBER 2009	CITY OF DIXON ENGINEERING STANDARD DETAIL DIXON CALIFORNIA

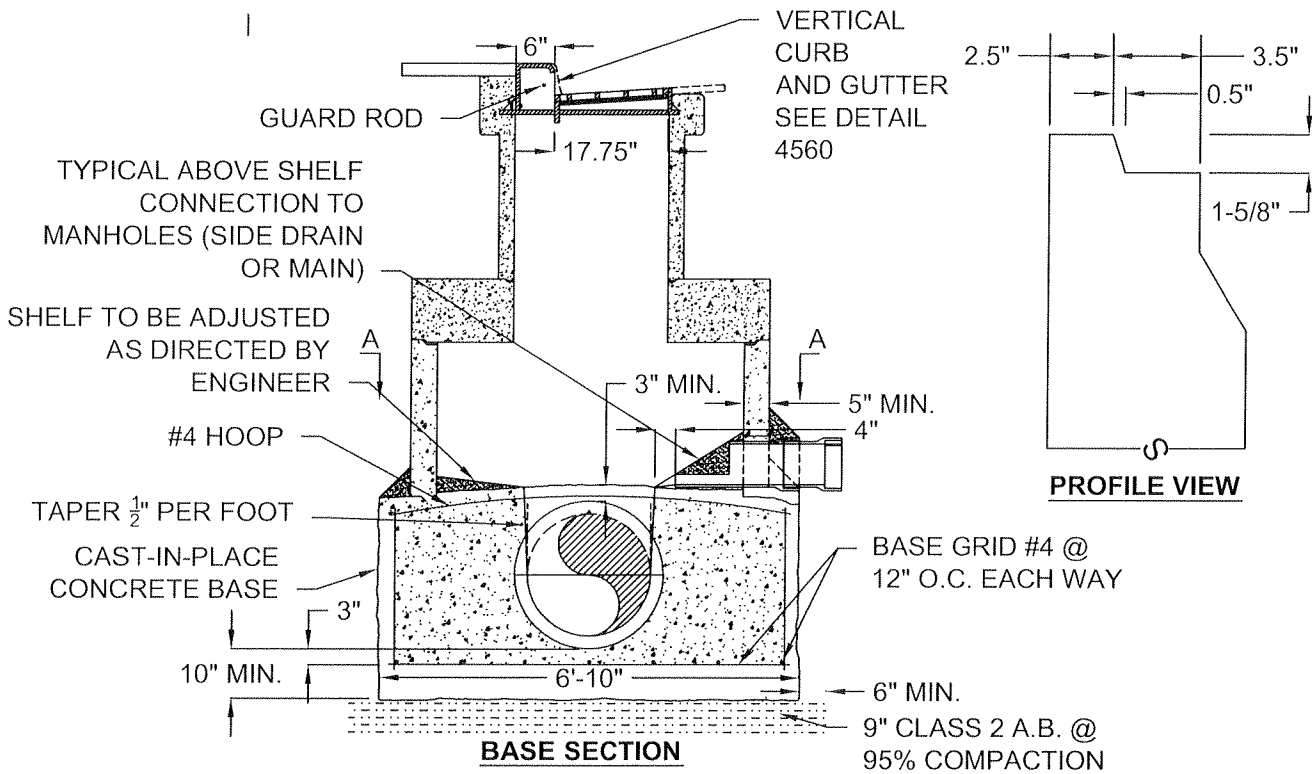

BASE SECTION

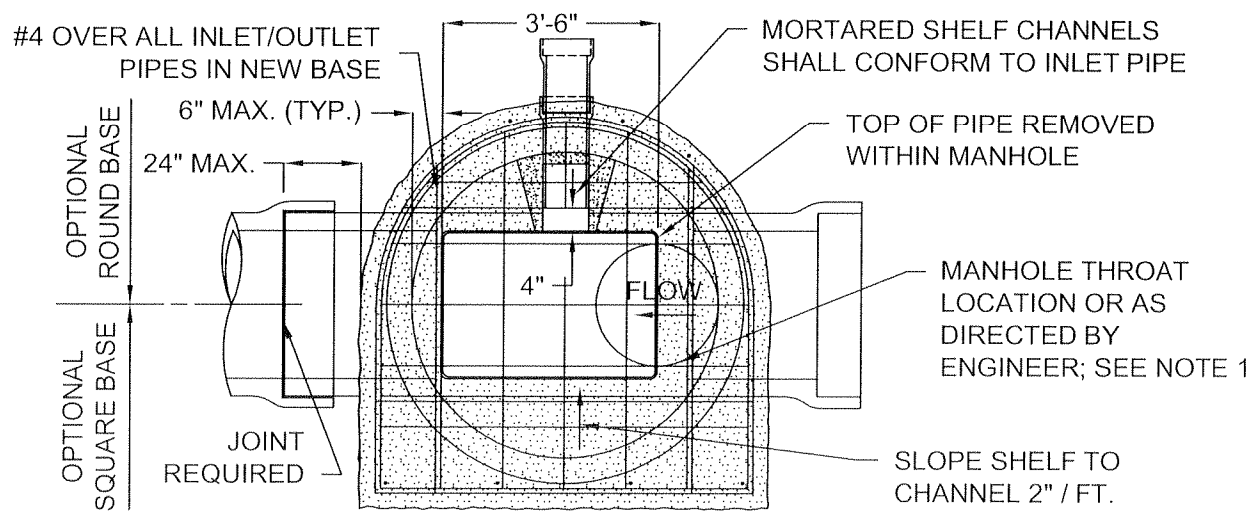

BASE SECTION A-A
(ROTATED 90°)

NOTES:

1. BASE SHALL BE CAST-IN-PLACE CONSTRUCTION.
2. CATCH BASIN FRAME, GRATE AND HOOD SHALL BE SOUTH BAY FOUNDRY MODEL #SBF 1947 WITH VANE GRATE AND GUARD ROD, OR APPROVED EQUAL. THE INLET FRAME AND HOOD SHALL BE BOLTED TOGETHER ALLOWING A ONE PIECE INSTALLATION.
3. VANE GRATES SHALL BE CONSTRUCTED TO RECEIVE WATER EITHER FROM ONE OR TWO DIRECTIONS DEPENDING ON GUTTER FLOW LINE DIRECTION.

DIXON CALIFORNIA CITY OF DIXON ENGINEERING STANDARD DETAIL	REGISTERED PROFESSIONAL ENGINEER PRINCE W. CUNNINGHAM No. C041985 EXP. 03/31/10 CIVIL STATE OF CALIFORNIA APPROVED: NOVEMBER 2009	STORM DRAIN CURB INLET TYPE A PIPES ≥ 24"	4520

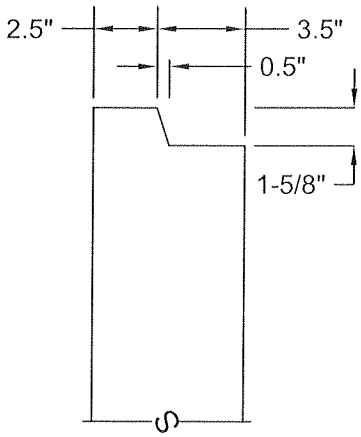

SECTION A-A

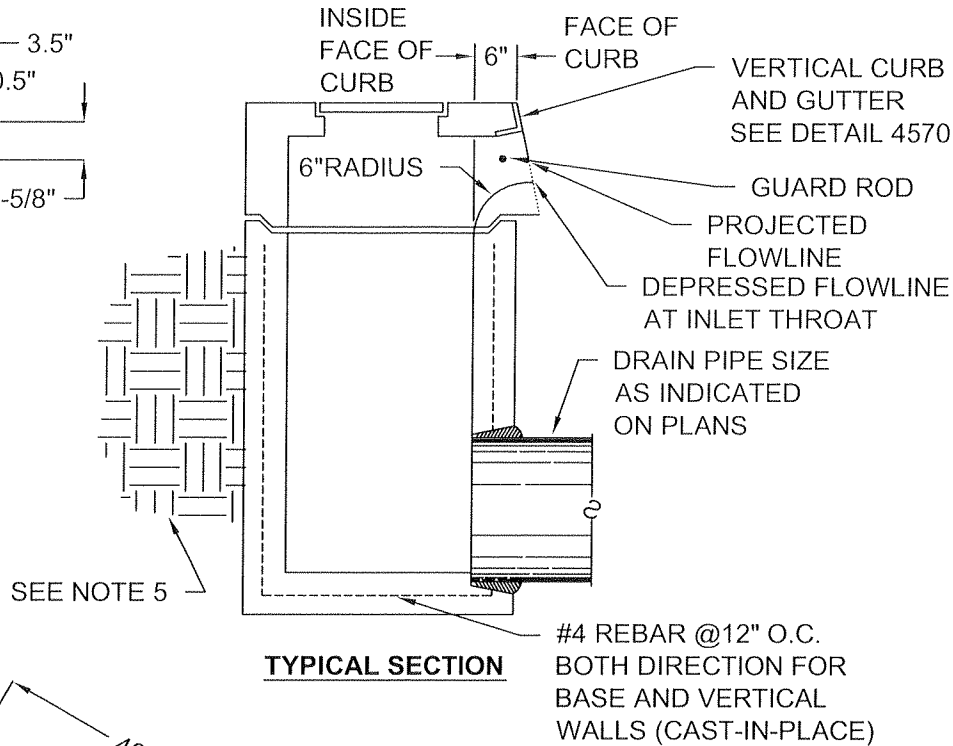

TYPICAL SECTION

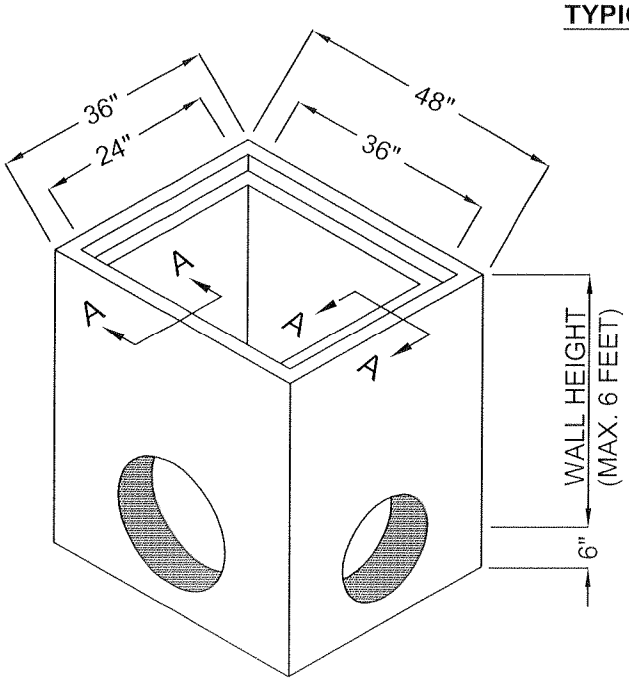

SPECIAL NOTE:
DRAIN INLET TYPE B TO BE USED ONLY BY APPROVAL OF THE CITY ENGINEER.

NOTES:

1. BASE MAY BE CAST-IN-PLACE OR PRECAST CONSTRUCTION.
2. PRECAST BASE SHALL BE PHOENIX PRECAST P-3648, OR APPROVED EQUAL.
3. PRECAST CURB INLET SHALL BE PHOENIX PRECAST P-3648-C WITH GUARD ROD, OR APPROVED EQUAL.
4. CAST-IN-PLACE SHALL INCLUDE #4 REBAR @ 12" ON CENTER BOTH DIRECTION FOR ALL VERTICAL WALLS AND BASE CONSTRUCTION. WALL SECTION SHALL NOT EXCEED 10" IN WIDTH.
5. 95% RELATIVE COMPACTION FOR APPROVED BACKFILL SHALL INSTALLED AROUND PERIMETER OF BASIN WHEN PRECAST IS USED.

4530	STORM DRAIN CURB INLET TYPE B PIPES < 24"	REGISTERED PROFESSIONAL ENGINEER PRINCE W. CUNNINGHAM No. C041985 EXP. 03/31/10 CIVIL STATE OF CALIFORNIA APPROVED: NOVEMBER 2009	CITY OF DIXON ENGINEERING STANDARD DETAIL

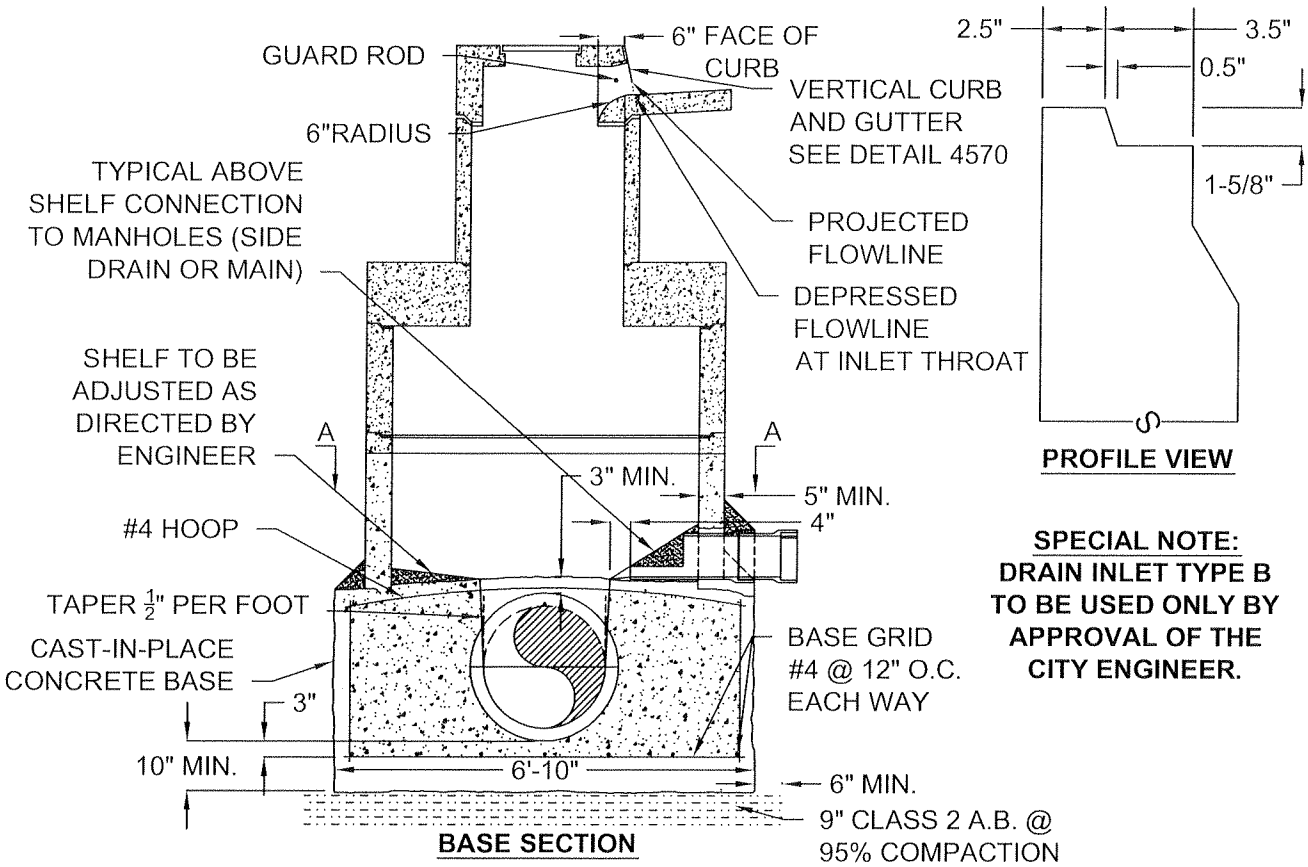

SPECIAL NOTE:
DRAIN INLET TYPE B TO BE USED ONLY BY APPROVAL OF THE CITY ENGINEER.

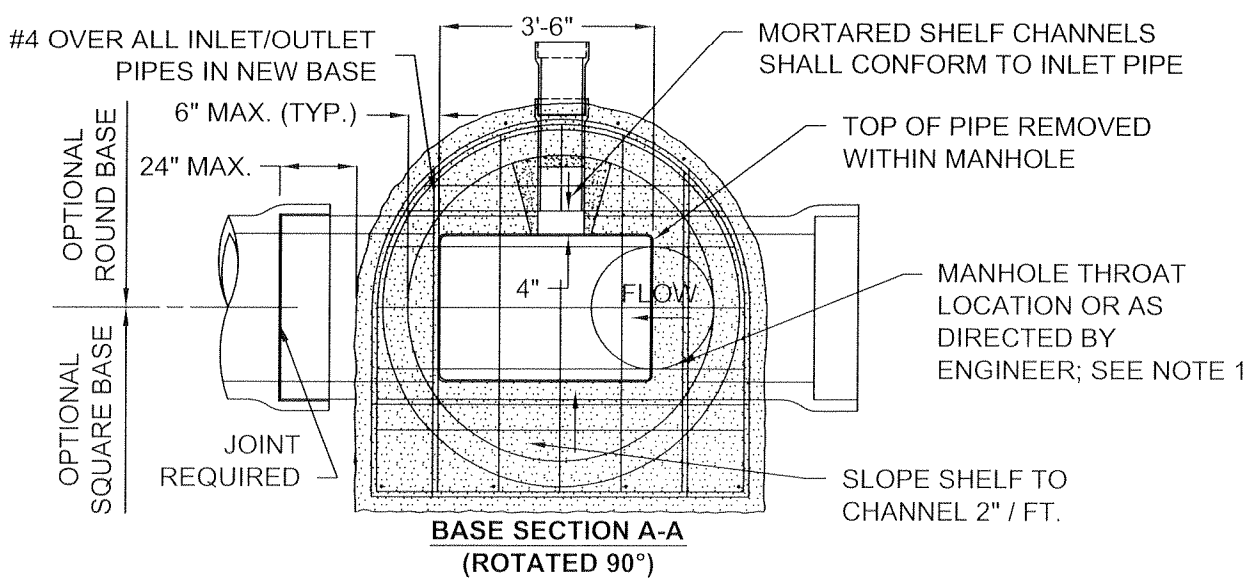

NOTES:

1. BASE SHALL BE CAST-IN-PLACE CONSTRUCTION.
2. PRECAST CURB INLET SHALL BE PHOENIX PRECAST P-3648-C WITH GUARD ROD, OR APPROVED EQUAL.

CITY OF DIXON ENGINEERING STANDARD DETAIL	APPROVED: NOVEMBER 2009	STORM DRAIN CURB INLET TYPE B PIPES ≥ 24"	4540

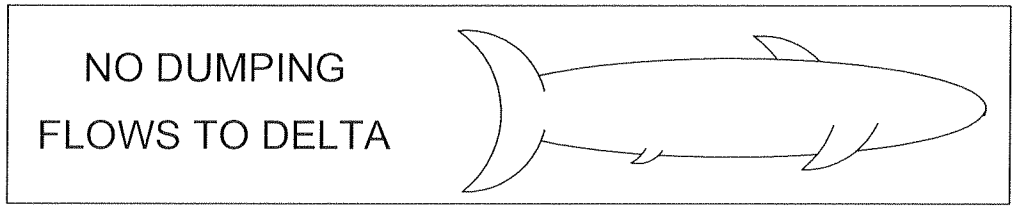

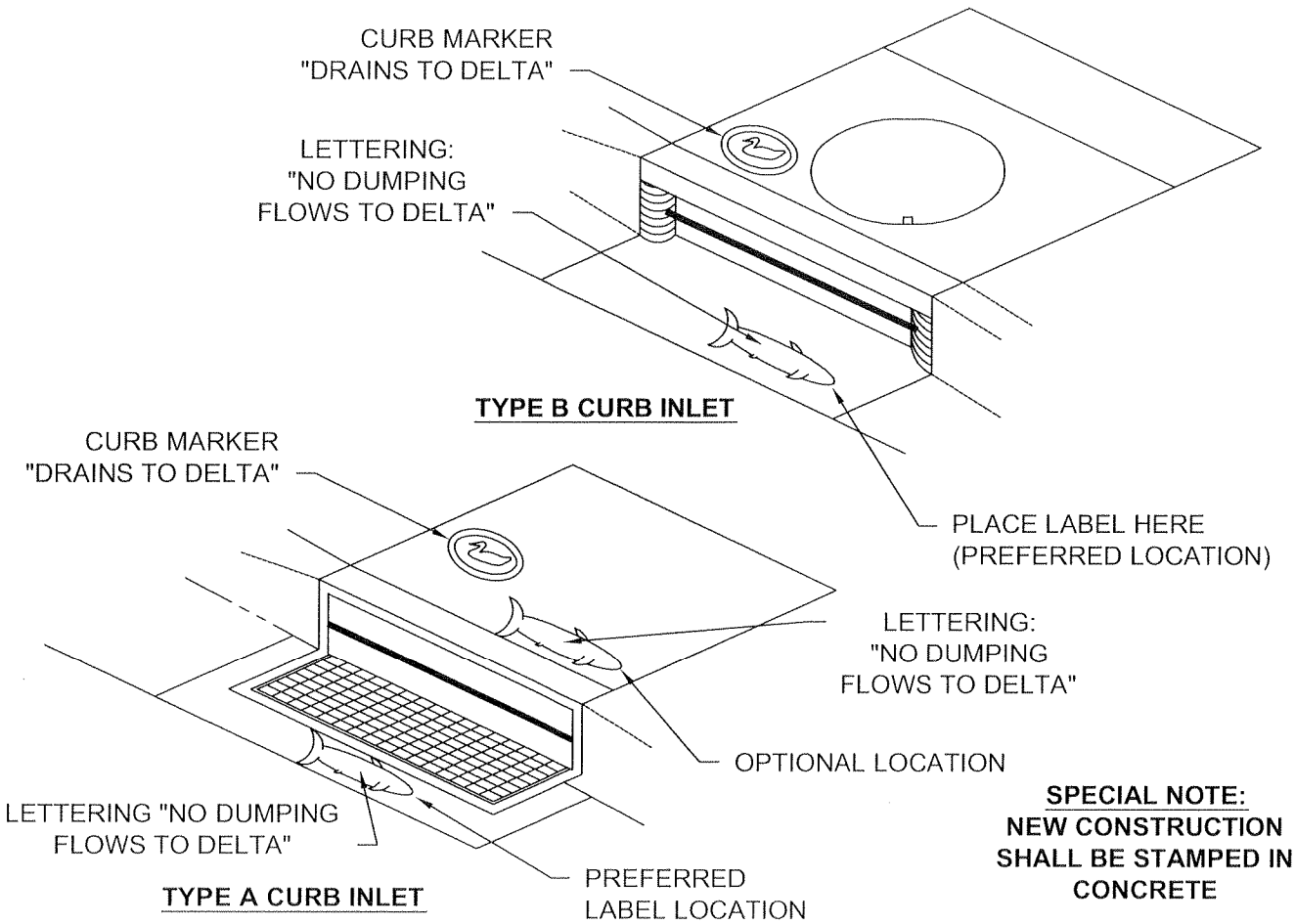

TYPE B CURB INLET

TYPE A CURB INLET

SPECIAL NOTE:
NEW CONSTRUCTION SHALL BE STAMPED IN CONCRETE

NOTES:

1. LETTERING SHALL BE $1\frac{1}{4}$" TO $1\frac{1}{2}$" IN HEIGHT. THE MESSAGE AND SYMBOL SHALL BE DEPRESSED $\frac{1}{8}$" TO $\frac{1}{4}$" INTO THE CONCRETE. THE FISH SYMBOL SHALL BE A MINIMUM OF 11" LONG AND 3 $\frac{1}{2}$" HIGH.
2. THE LABEL SHALL BE APPROVED BY THE CITY INSPECTOR PRIOR TO PLACEMENT.
3. THIS DETAIL SHALL APPLY TO ALL DRAIN INLET DESIGNS. WHERE THE SIDEWALK DOES NOT ADJOIN THE BACK OF CURB, THE NOTICE SHALL BE STAMPED INTO THE CONCRETE BEHIND THE DRAIN INLET. WHERE THE DRAIN INLET IS PLACED IN A "V" GUTTER WITHOUT A CURB INLET, THE NOTICE SHALL BE STAMPED ON ONE SIDE, PARALLEL TO THE INLET.
4. THE MESSAGE SHALL BE BLEMISH FREE AND LEGIBLE.

4550	"NO DUMPING" CURB INLET LABEL	REGISTERED PROFESSIONAL ENGINEER BRUCE W. CUNNINGHAM No. C041985 EXP. 03/31/10 CIVIL STATE OF CALIFORNIA APPROVED: NOVEMBER 2009	CITY OF DIXON ENGINEERING STANDARD DETAIL DIXON CALIFORNIA

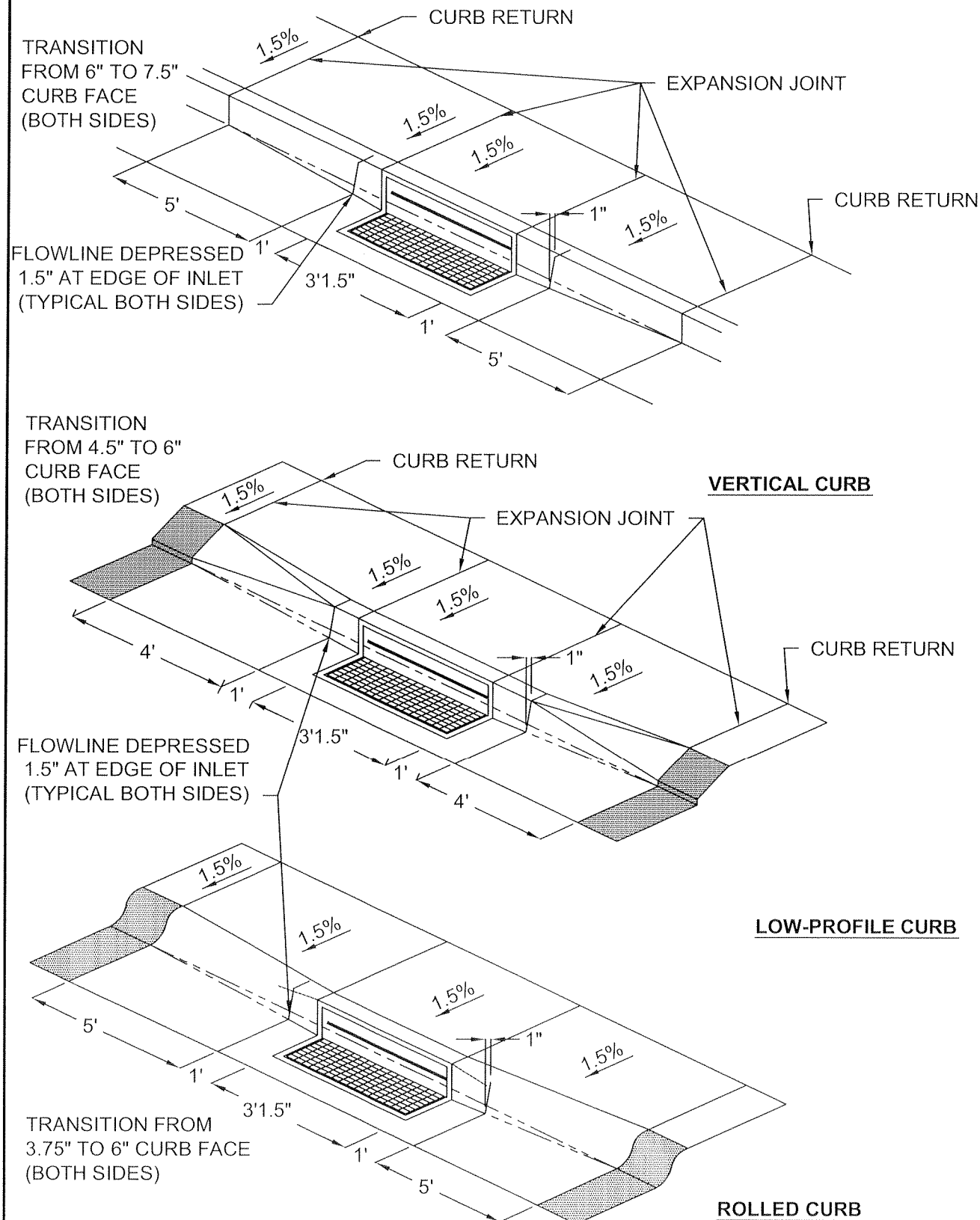

NOTES:

1. SEE DETAIL 3000, 3010, OR 3020 FOR SIDEWALK DETAILS.

CITY OF DIXON ENGINEERING STANDARD DETAIL	REGISTERED PROFESSIONAL ENGINEER PATRICK W. CUNNINGHAM No. C041983 EXP. 03/31/10 CIVIL STATE OF CALIFORNIA APPROVED: NOVEMBER 2009	CURB INLET TYPE A	4560

SPECIAL NOTE:
TO BE USED ONLY BY APPROVAL OF THE CITY ENGINEER.

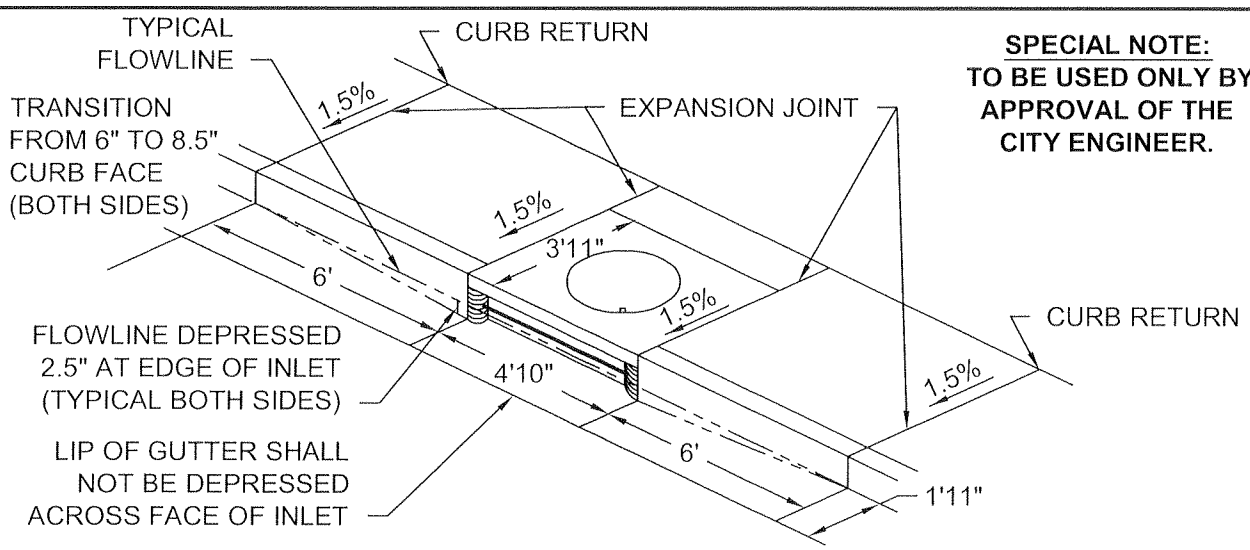

VERTICAL CURB

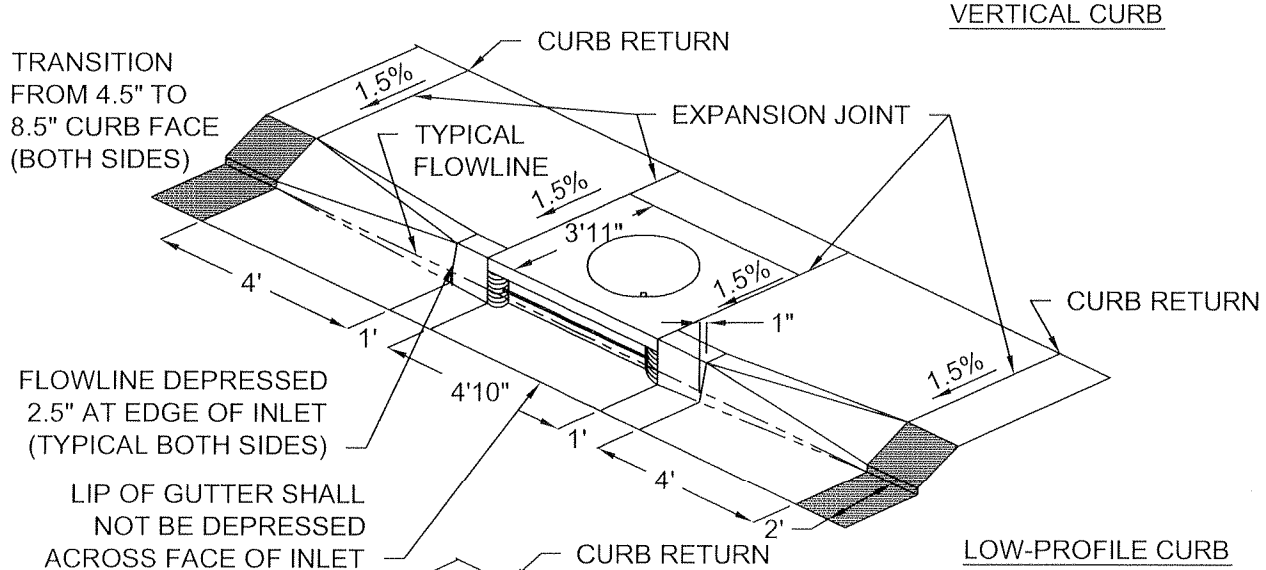

LOW-PROFILE CURB

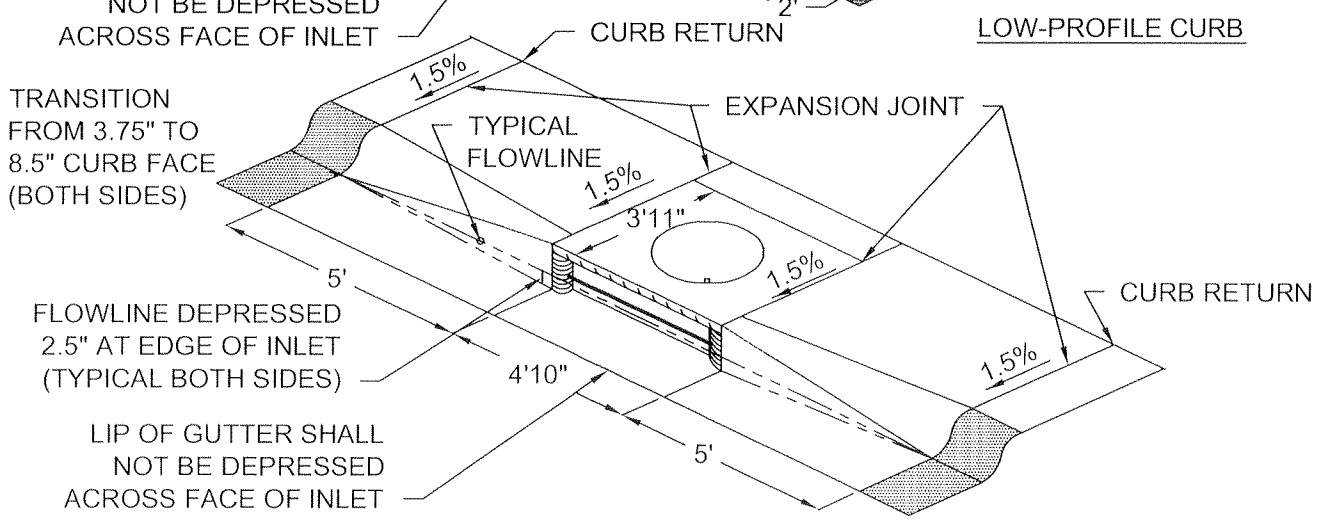

ROLLED CURB

NOTES:
1. TYPE B CURB INLET SHALL HAVE STANDARD ANGLE PLATE NOSE.
2. SEE DETAIL 3000, 3010, OR 3020 FOR SIDEWALK DETAILS.

4570	CURB INLET TYPE B	REGISTERED PROFESSIONAL ENGINEER JOSEPH W. CUNNINGHAM No. C041985 EXP. 03/31/10 CIVIL STATE OF CALIFORNIA APPROVED: NOVEMBER 2009	CITY OF DIXON ENGINEERING STANDARD DETAIL DIXON CALIFORNIA

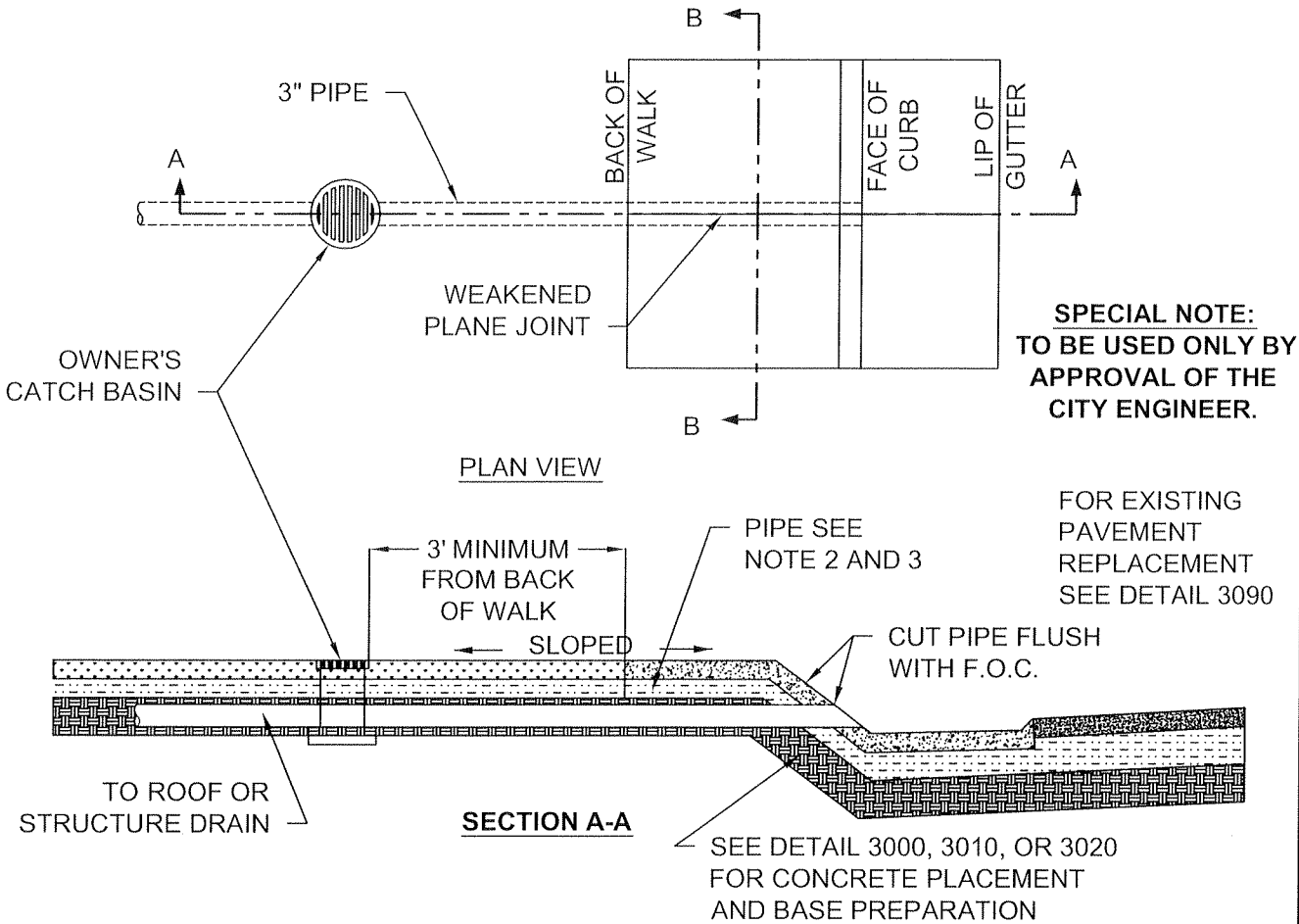

SPECIAL NOTE:
TO BE USED ONLY BY APPROVAL OF THE CITY ENGINEER.

SECTION A-A

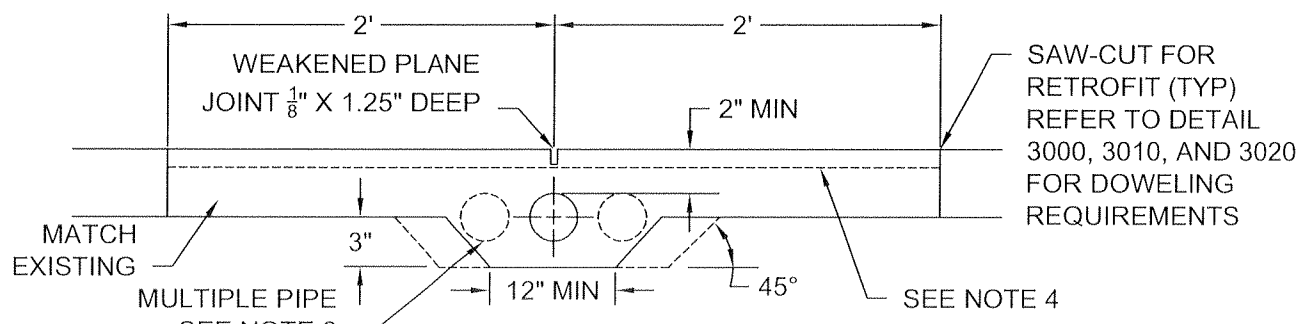

SECTION B-B

NOTES:

1. PRIVATE PROPERTY OWNER SHALL BE RESPONSIBLE FOR CLEANING AND MAINTAINING ENTIRE PIPE.
2. PIPE SHALL BE 3" O.D. 12 STANDARD WEIGHT GALVANIZED STEEL OR NON-BELLCAST IRON PIPE IN TRAFFIC AREAS AND PVC IN NON-TRAFFIC AREAS.
3. PIPE SHALL BE PLACED WITH A MINIMUM 1% SLOPE.
4. PLACE 4x4 10 GAGE WIRE MESH FULL LENGTH 24" ON EACH SIDE OF PIPE.
5. UNDER SIDEWALK DRAINS WITHIN PUBLIC RIGHT-OF-WAY TO BE USED ONLY UPON APPROVAL OF CITY ENGINEER WHERE A STORM DRAIN DOES NOT EXIST, OR EXTENSION OF AN EXISTING STORM DRAIN IS IMPRACTICAL.
6. MULTIPLE PIPES MAY BE USED WHERE REQUIRED BY THE CONTRIBUTING AREA. IN THIS CASE, PIPES SHALL BE SPACED 7" APART ON CENTER.

DIXON CALIFORNIA CITY OF DIXON ENGINEERING STANDARD DETAIL	REGISTERED PROFESSIONAL ENGINEER CLIFFORD W. CUNNINGHAM No. C041983 EXP. 03/31/10 CIVIL STATE OF CALIFORNIA APPROVED: NOVEMBER 2009	UNDER SIDEWALK DRAIN	4580

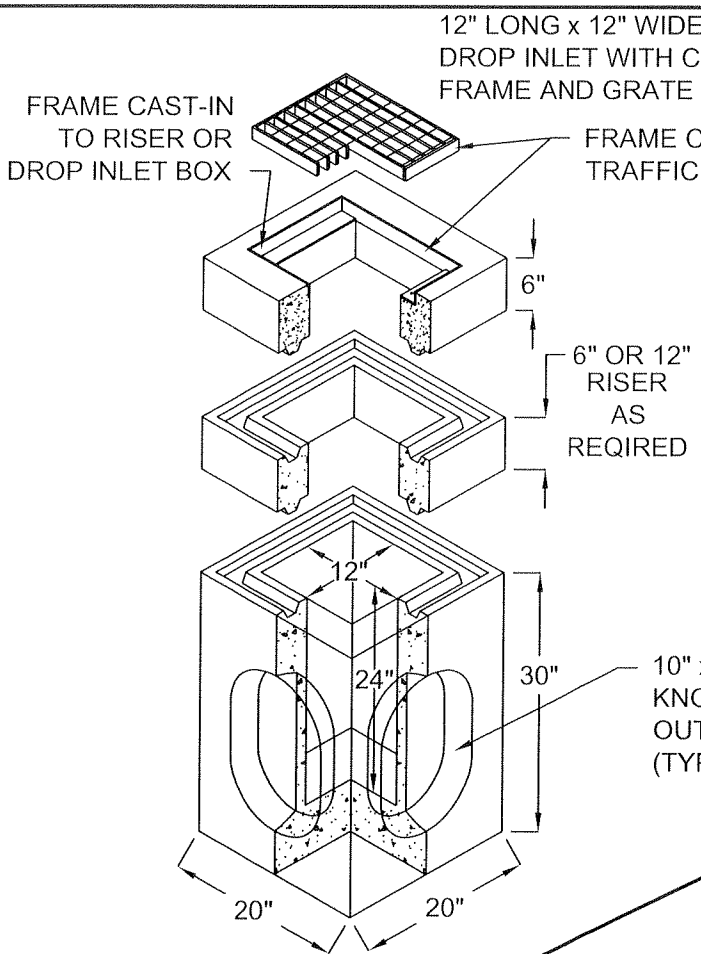

PARK AND TURF FIELD INLET

NOTES:

1. JENSEN 1212-HDI CHRISTY V12 DRAIN BOX OR APPROVED EQUAL.
2. WELDED STEEL BAR GRATE SHALL HAVE TWO HOLD DOWN BOLTS.
3. H-20 TRAFFIC LOADING.
4. 12" PERIMETER GROUTED COBBLE COLLAR FOR PLANTER BED APPLICATIONS.
5. NATIVE BACKFILL TO 90% RELATIVE COMPACTION.

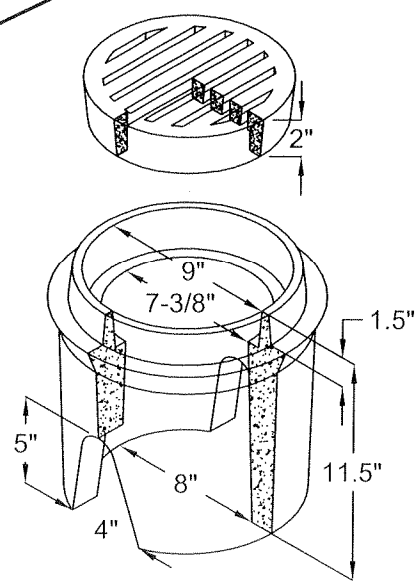

PLANTER BED FIELD INLET

NOTES:

1. JENSEN F8 OR CHRISTY V1 OR APPROVED EQUAL.
2. 12" PERIMETER GROUTED COBBLE COLLAR.
3. NATIVE BACKFILL TO 90% RELATIVE COMPACTION.

SPECIAL NOTE:

CALTRANS TYPE OCP OR OCPI FIELD INLETS TO BE USED IN ALL OTHER FIELD APPLICATION WITH COBBLE STONE OR OTHER APPROVED EROSION CONTROL PROTECTION.

4590	FIELD INLETS	REGISTERED PROFESSIONAL ENGINEER PRINCE W. CUNNINGHAM No. C041985 EXP. 03/31/10 CIVIL STATE OF CALIFORNIA APPROVED: NOVEMBER 2009	CITY OF DIXON ENGINEERING STANDARD DETAIL DIXON CALIFORNIA

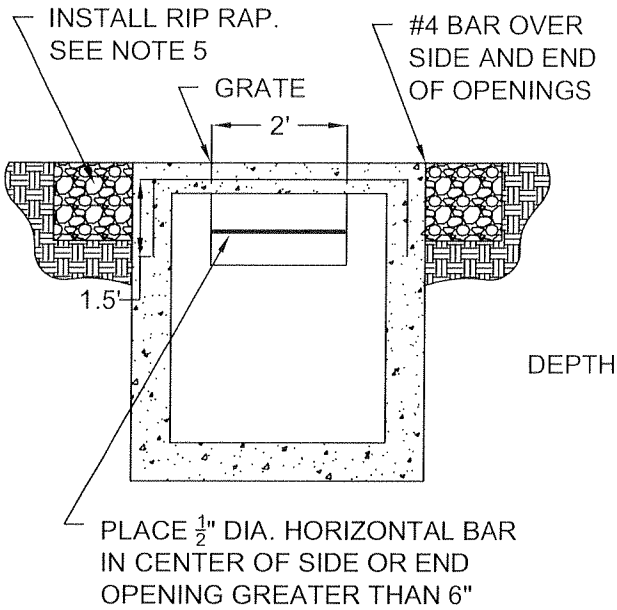

SECTION B-B

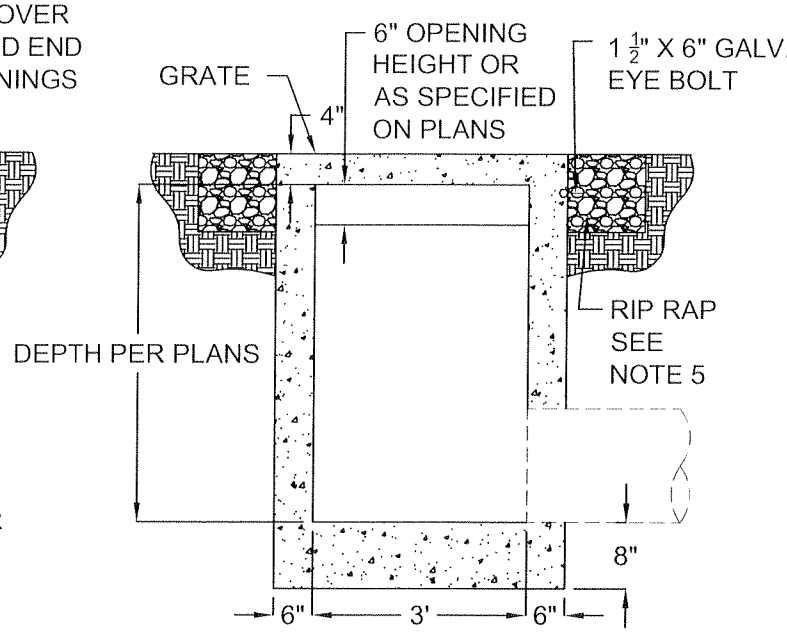

SECTION A-A

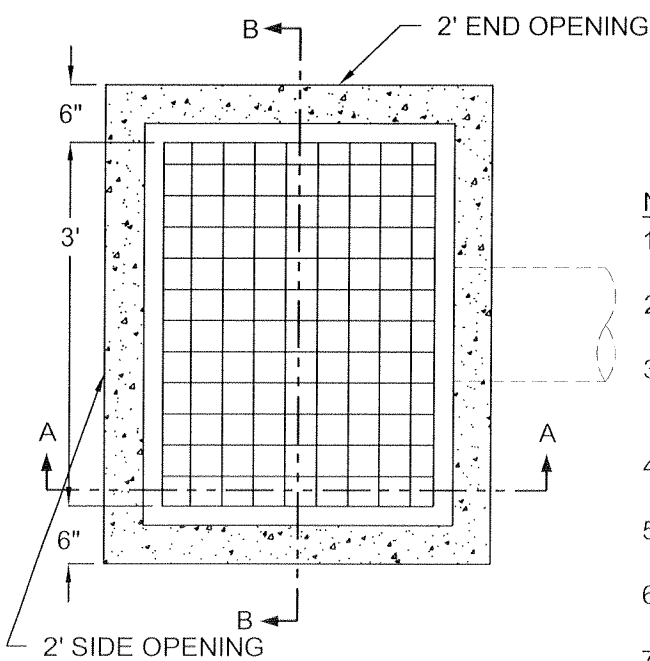

GRATE DETAIL

NOTES:

1. PROVIDE $\frac{1}{4}$" X 18" GALV. CHAIN WELD TO COVER AND EYE BOLT.
2. PROVIDE END OR SIDE OPENINGS AS SHOWN ON PLAN OR CROSS SECTION.
3. TOP OF ALL WALLS TO BE FINISHED TO A FLAT PLANE TO PROVIDE EVEN BEARING FOR PLATE COVER.
4. ALL METAL SHALL BE GALVANIZED PER ASTM A123.
5. INSTALL 18" DEEP X 2' WIDE RIP RAP AROUND INLET.
6. NATIVE BACKFILL TO 90% RELATIVE COMPACTION.
7. WALL REINFORCING NOT REQUIRED WHEN DEPTH TO BOTTOM OF INLET. WALLS EXCEEDING THESE LIMITS SHALL BE REINFORCED WITH #4 BARS @ 18" O.C. PLACED 1 $\frac{1}{2}$" CLEAR TO INSIDE OF BOX UNLESS OTHERWISE SHOWN ON PLANS.

DIXON CALIFORNIA — CITY OF DIXON ENGINEERING STANDARD DETAIL	REGISTERED PROFESSIONAL ENGINEER CLAUDE W. CUNNINGHAM No. C041935 EXP. 03/31/10 CIVIL STATE OF CALIFORNIA APPROVED: NOVEMBER 2009	FIELD INLET	4600

This Page Intentionally
Left Blank

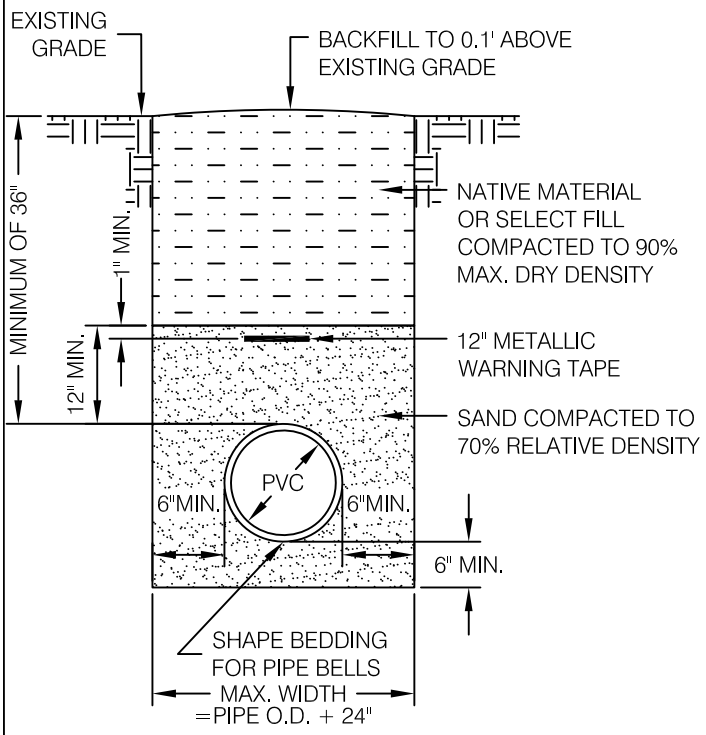

TRENCH IN OPEN AREAS

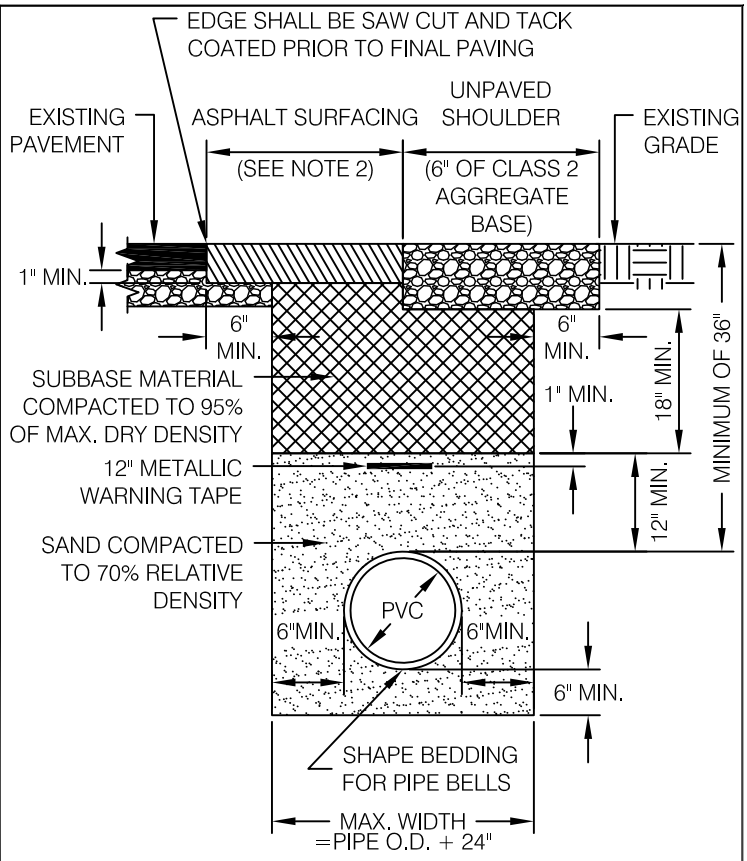

TRENCH IN EXISTING PAVED PORTIONS AND IN UNPAVED SHOULDERS

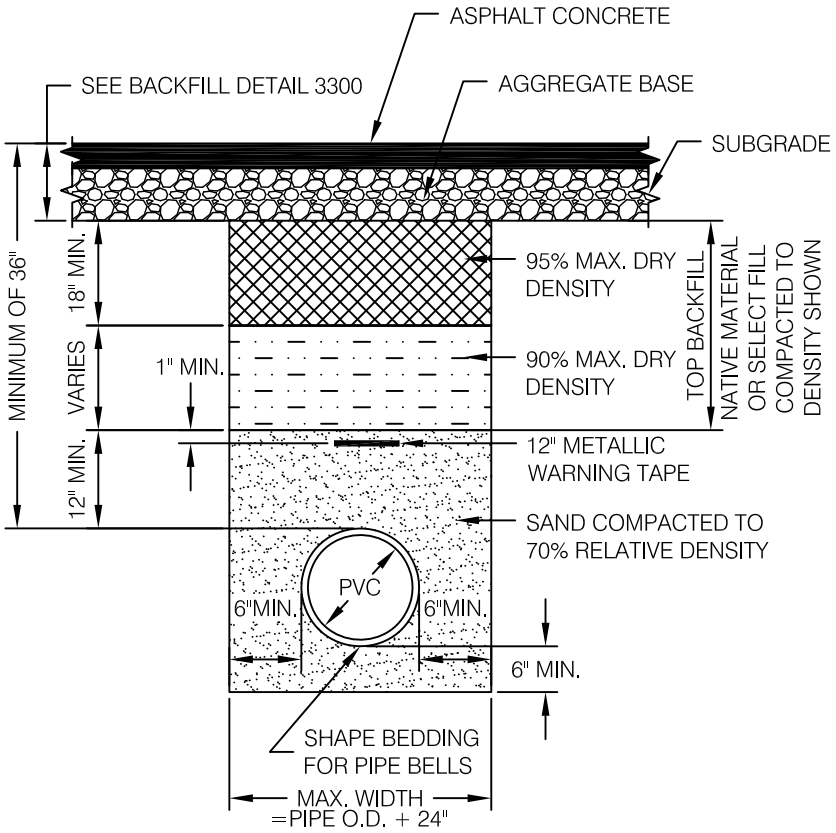

TRENCH IN PROPOSED PAVED PORTIONS

NOTES:

1. THE TEMPORARY ASPHALT SURFACING SHALL HAVE A MINIMUM THICKNESS OF 2 INCHES AND SHALL BE PLACED IMMEDIATELY AFTER BACKFILL AND MAINTAINED BY THE CONTRACTOR UNTIL PERMANENT SURFACING IS INSTALLED. THE PERMANENT ASPHALT SURFACING SHALL BE 1 INCH THICKER THAN THE EXISTING PAVEMENT, WITH A MINIMUM THICKNESS OF 4 INCHES. ASPHALT PAVING SHALL MEET THE REQUIREMENTS OF CALTRANS STANDARD SPECIFICATIONS WITH METHOD OF PLACEMENT AS REQUIRED BY THE CITY OF DIXON.
2. THE SUBBASE MATERIAL SHALL BE CLASS 2 AGGREGATE BASE PER SECTION 26 OF CALTRANS STANDARD SPECIFICATIONS.
3. MAXIMUM DRY DENSITY IN ACCORDANCE WITH ASTM D-1557 FOR COHESIVE MATERIALS. RELATIVE DENSITY IN ACCORDANCE WITH ASTM D-4253 FOR NON-COHESIVE MATERIALS.
4. EXISTING ASPHALT TO BE REMOVED FROM THE JOB SITE, NOT TO BE PLACED IN BACKFILL.
5. JETTING OF TRENCH BACKFILL IS NOT PERMITTED.
6. REFER TO THE STANDARD SPECIFICATIONS FOR ADDITIONAL REQUIREMENTS.
7. DIMENSIONS SHOWN ARE REQUIRED UNLESS OTHERWISE APPROVED BY THE CITY ENGINEER.

CITY OF DIXON ENGINEERING STANDARD DETAIL	APPROVED: AUGUST 2014	TRENCH DETAILS FOR POLYVINYL CHLORIDE PIPE (PVC)	W-1

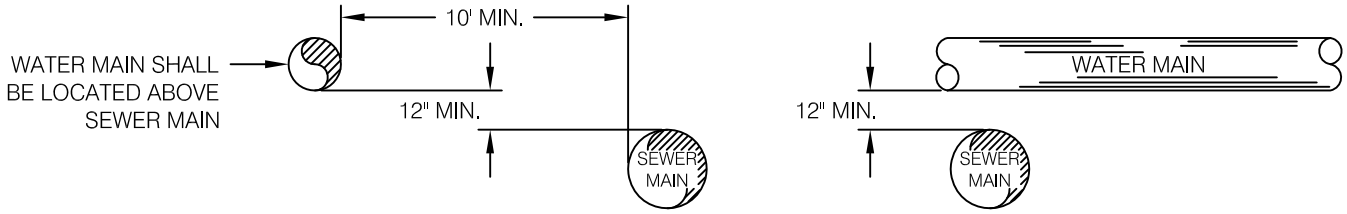

PARALLEL INSTALLATION

PERPENDICULAR CROSSING

BASIC SEPARATION REQUIREMENTS

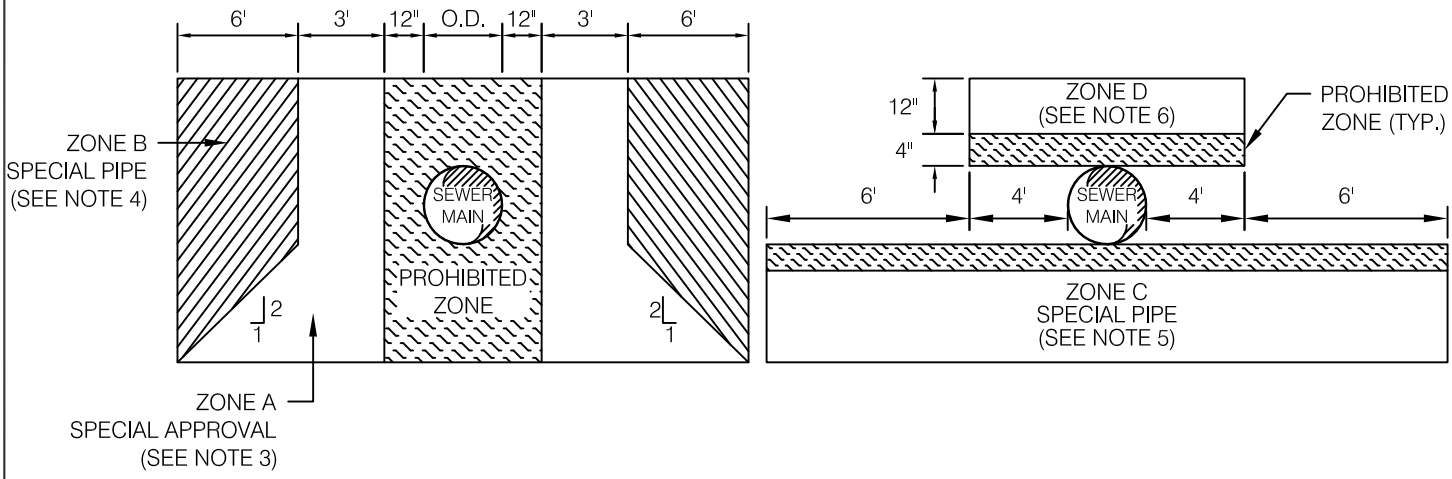

PARALLEL INSTALLATION

PERPENDICULAR CROSSING

SPECIAL SEPARATION REQUIREMENTS

DIMENSIONS ARE FROM THE OUTSIDE OF THE SEWER MAIN TO THE OUTSIDE OF THE WATER MAIN

NOTES:

1. THE CONTRACTOR SHALL FOLLOW THE CALIFORNIA WATERWORKS STANDARDS FOR THE SEPARATION REQUIREMENTS BETWEEN WATER MAINS AND SANITARY SEWER GUIDELINES PREPARED BY THE STATE OF CALIFORNIA DEPARTMENT OF HEALTH SERVICES.
2. WHEN THE BASIC SEPARATION REQUIREMENTS CANNOT BE MET, THE CONTRACTOR SHALL INSTALL WATER MAINS ACCORDING TO SPECIAL INSTALLATION REQUIREMENTS.
3. NO WATER MAINS PARALLEL TO SEWER MAINS SHALL BE INSTALLED WITHIN ZONE A WITHOUT SPECIAL APPROVAL FROM THE DEPARTMENT OF HEALTH SERVICES.
4. WHEN LOCATED IN ZONE B, THE WATER MAIN SHALL BE CLASS 200 PVC, DR 14 PER AWWA C900 OR EQUIVALENT.
5. WHEN LOCATED IN ZONE C, THE WATER MAIN SHALL HAVE NO JOINTS WITHIN ZONE C AND BE CLASS 200 PVC, DR 14 PER AWWA C900 OR EQUIVALENT.
6. WHEN LOCATED IN ZONE D, THE WATER MAIN SHALL HAVE NO JOINTS WITHIN FOUR FEET (4') FROM EITHER SIDE OF THE SEWER MAIN AND BE CLASS 200 PVC, DR 14 PER AWWA C900 OR EQUIVALENT.

CITY OF DIXON ENGINEERING STANDARD DETAIL	APPROVED: AUGUST 2014	WATER - SEWER SEPARATION DETAIL	W-2

PIPE SIZE	TEES		
	H	T	X
4"	1.5'	1.5'	1'
6"	1.5'	3'	1'
8"	2.5'	3.5'	1.5'
10"	3'	4'	1.5'
12"	3'	6'	1.5
14"	4'	5.5'	1.5'
16"	4.5'	5.5'	1.5'
18"	5'	5.5'	1.5'
20"	5'	6.5'	1.5'

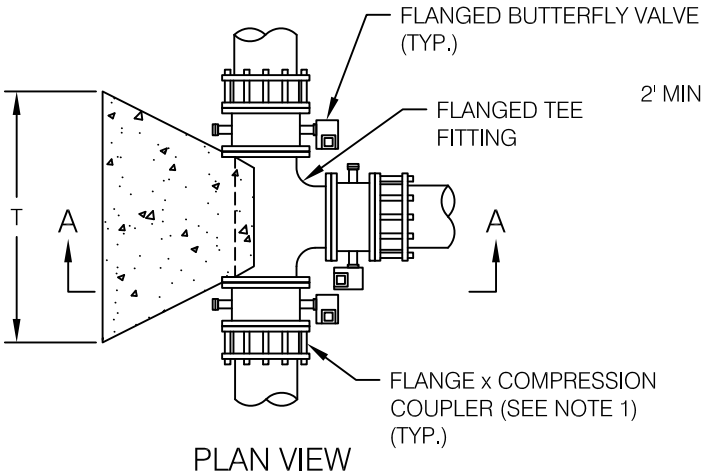

PLAN VIEW

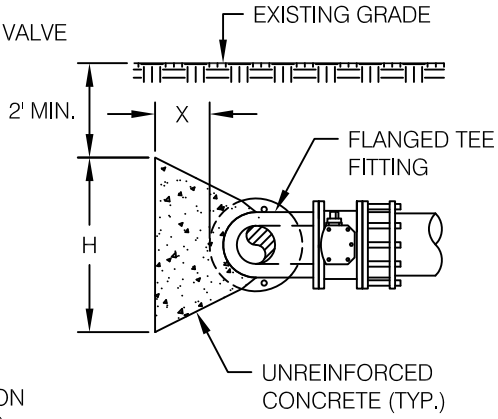

SECTION A-A

TEES

HORIZONTAL BENDS MINIMUM DIMENSIONS										
PIPE SIZE	BENDS (△)									
	3°-7°		>7°-22 ½°		>22 ½°-45°		>45°-60°		>60°-90°	
	H	L	H	L	H	L	H	L	H	L
4"	NO THRUST BLOCK REQUIRED		1.5'	1'	1.5'	1'	1.5'	1.5'	1.5'	2'
6"			1.5'	1.5'	1.5'	2.5'	1.5'	3'	1.5	4'
8"			2'	2'	2'	3'	2.5'	3.5'	2.5'	4.5'
10"	1.5'	1'	2'	2'	2.5'	3'	2.5'	4'	3'	4.5'
12"	2'	1'	2'	2'	3'	4'	3'	5.5	3'	7.5
14"	2'	1.5'	3'	3'	4'	4'	4'	5.5'	4'	7.5'
16"	2'	2'	3'	4'	4.5'	4.5'	5'	6'	5'	8'
18"	2.5'	2'	3.5'	4'	4.5'	5'	5'	6'	5'	8'
20"	3'	4'	3.5'	5'	4.5'	6'	5'	7'	5'	9.5'

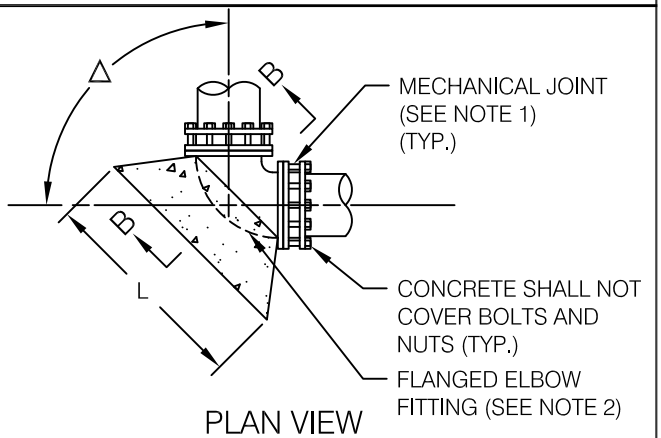

PLAN VIEW

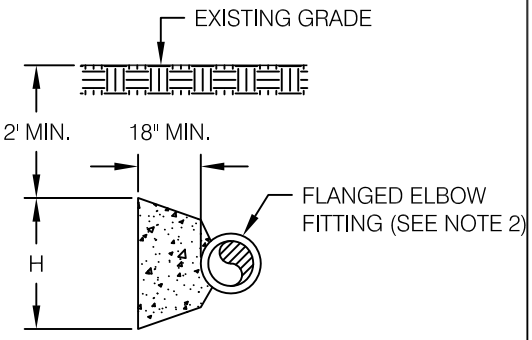

SECTION B-B

BENDS

NOTES:

1. FLANGE BY COMPRESSION COUPLERS MAY BE FLANGE BY MECHANICAL JOINT OR FLANGED COUPLING ADAPTER.
2. FITTINGS MAY BE FLANGED OR MECHANICAL JOINT TYPE.
3. ALL FLANGED OR MECHANICAL JOINT CROSSES, TEES AND BENDS SHALL BE DUCTILE IRON (AWWA C-110 OR C-153) CLASS 150 AND COMPATIBLE WITH CAST IRON PIPE SIZE PVC. THE INTERIOR SURFACES SHALL BE CEMENT MORTAR LINED PER AWWA C-104 AND THE EXTERIOR SURFACES SHALL BE COAL TAR COATED PER AWWA C-203.
4. ALL BELOW GROUND NUTS, BOLTS AND MISCELLANEOUS STEEL SHALL BE POLYETHYLENE ENCASED AS PER AWWA C-105 OR TAPE WRAPPED PER AWWA C-209, 20 MILS MINIMUM IN BOTH CASES.
5. ALL THRUST BLOCKS SHALL BE CAST AGAINST UNDISTURBED NATIVE MATERIAL. NO BACKFILL ALLOWED BETWEEN UNDISTURBED NATIVE MATERIAL AND THRUST BLOCK.
6. THE CONCRETE SHALL HAVE A MINIMUM COMPRESSIVE STRENGTH OF 3,000 PSI. ALL CEMENT SHALL BE PORTLAND CEMENT, TYPE II, WITH A MINIMUM OF 5 SACKS OF CEMENT PER CUBIC YARD OF CONCRETE.
7. FOR DESIGN PRESSURES GREATER THAN 150 PSI, THRUST BLOCK DRAWINGS AND CALCULATIONS SHALL BE SUBMITTED TO THE CITY ENGINEER FOR APPROVAL.

CITY OF DIXON
ENGINEERING
STANDARD DETAIL

APPROVED: AUGUST 2014

FITTINGS & THRUST BLOCKS FOR HORIZONTAL BENDS AND TEES

W-3

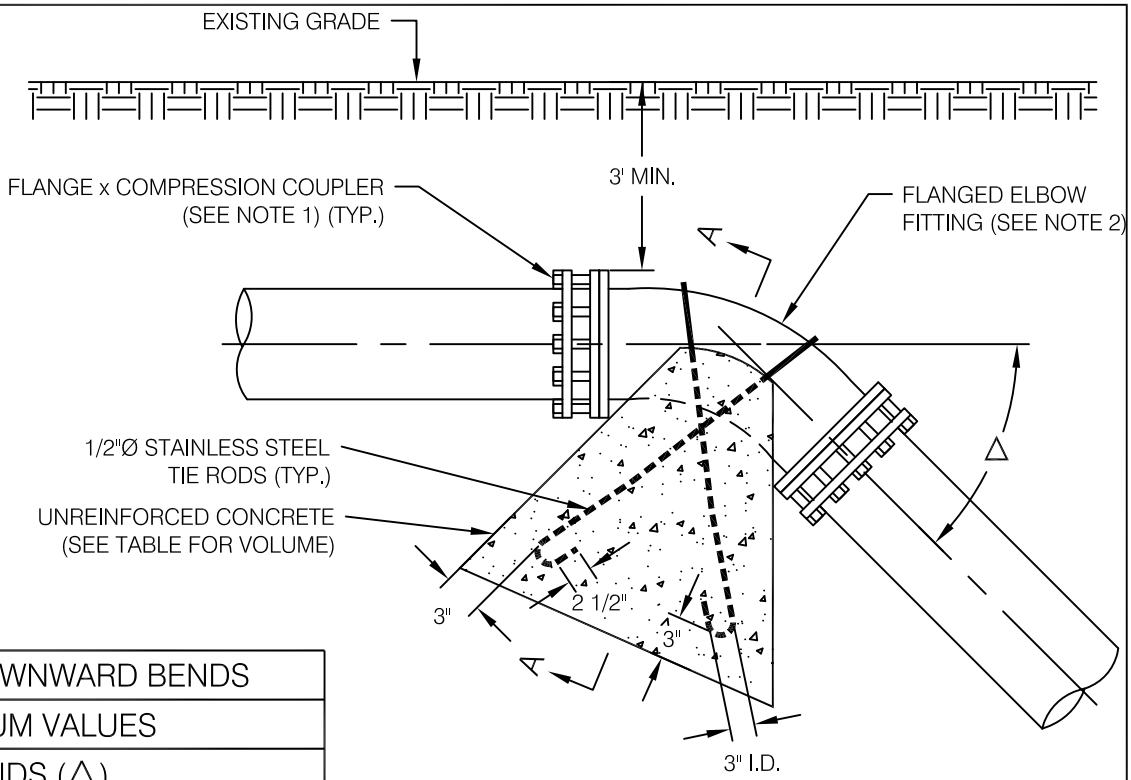

PLAN VIEW

VERTICAL DOWNWARD BENDS				
MINIMUM VALUES				
PIPE SIZE	BENDS (△)			
	3°-7°	>7°-22 ½°	>22 ½°-45°	>45°-60°
	CU YRD	CU YRD	CU YRD	CU YRD
4"	0.25	0.5	0.5	0.5
6"	0.25	0.5	1	1.5
8"	0.5	1.5	2.5	3
10"	0.5	1.5	3	3.5
12"	1	2.5	4	5
14"	1	3.5	6	8
16"	1.5	4	8	10
18"	2	5	9	11
20"	3	6	10	12

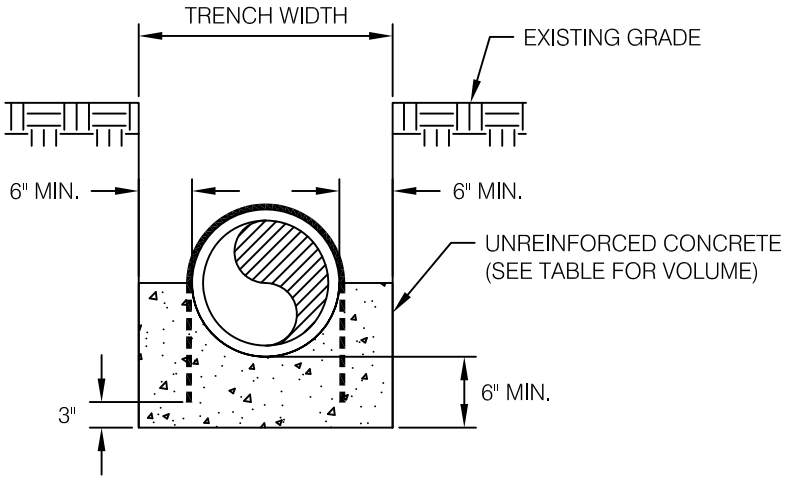

SECTION A-A

NOTES:

1. FLANGE BY COMPRESSION COUPLERS MAY BE FLANGE BY MECHANICAL JOINT OR FLANGED COUPLING ADAPTER.
2. FITTINGS MAY BE FLANGED OR MECHANICAL JOINT TYPE.
3. ALL FLANGED OR MECHANICAL JOINT CROSSES, TEES AND BENDS SHALL BE DUCTILE IRON (AWWA C-110 OR C-153) CLASS 150 AND COMPATIBLE WITH CAST IRON PIPE SIZE PVC. THE INTERIOR SURFACES SHALL BE CEMENT MORTAR LINED PER AWWA C-104 AND THE EXTERIOR SURFACES SHALL BE COAL TAR COATED PER AWWA C-203.
4. ALL BELOW GROUND NUTS, BOLTS AND MISCELLANEOUS STEEL SHALL BE POLYETHYLENE ENCASED AS PER AWWA C-105 OR TAPE WRAPPED PER AWWA C-209, 20 MILS MINIMUM IN BOTH CASES.
5. ALL THRUST BLOCKS SHALL BE CAST AGAINST UNDISTURBED NATIVE MATERIAL. NO BACKFILL ALLOWED BETWEEN UNDISTURBED NATIVE MATERIAL AND THRUST BLOCK.
6. THE CONCRETE SHALL HAVE A MINIMUM COMPRESSIVE STRENGTH OF 3,000 PSI. ALL CEMENT SHALL BE PORTLAND CEMENT, TYPE II, WITH A MINIMUM OF 5 SACKS OF CEMENT PER CUBIC YARD OF CONCRETE.
7. FOR DESIGN PRESSURES GREATER THAN 150 PSI, THRUST BLOCK DRAWINGS AND CALCULATIONS SHALL BE SUBMITTED TO THE CITY ENGINEER FOR APPROVAL.

CITY OF DIXON ENGINEERING STANDARD DETAIL	APPROVED: AUGUST 2014	FITTINGS & THRUST BLOCKS FOR VERTICAL DOWNWARD BENDS	W-4

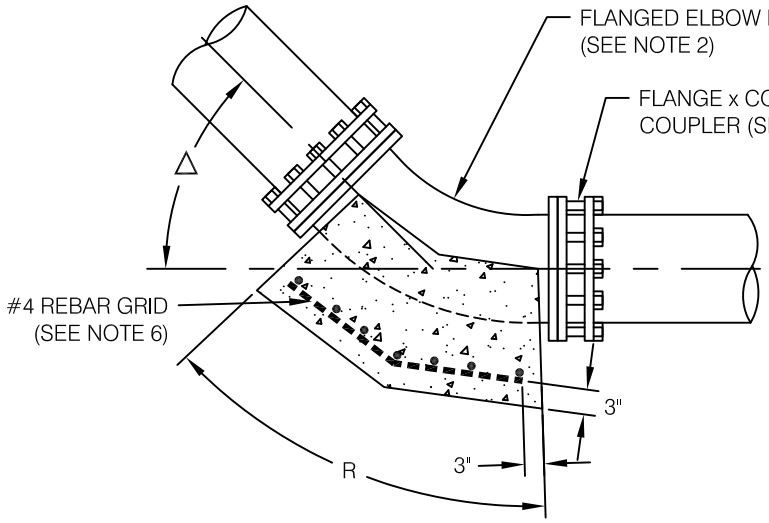

SECTION A-A

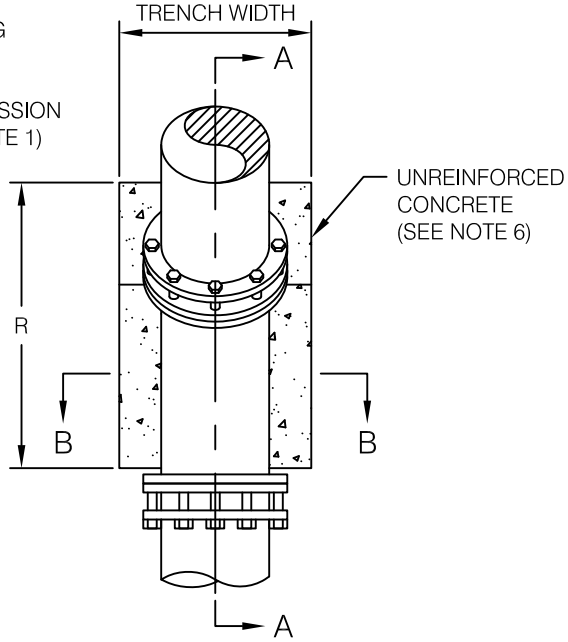

PLAN VIEW

VERTICAL UPWARD BENDS				
MINIMUM VALUES				
PIPE SIZE	BENDS (Δ)			
	3°-7°	>7°-22 ½°	>22 ½°-45°	>45°-60°
	R	R	R	R
4"	NA	1'	1'	1'
6"	NA	1'	1.5'	2'
8"	NA	1.5'	2.5'	3.5'
10"	1'	1.5'	3'	4'
12"	1'	2'	4.5'	5.5
14"	1'	3'	6'	8'
16"	1'	3.5'	7'	9'
18"	1.5'	4'	8'	10'
20"	2'	5'	10'	12'

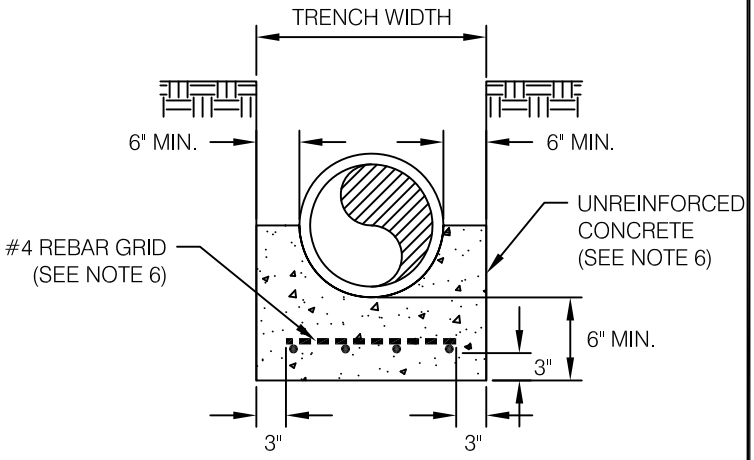

SECTION B-B

NOTES:

1. FLANGE BY COMPRESSION COUPLERS MAY BE FLANGE BY MECHANICAL JOINT OR FLANGED COUPLING ADAPTER.
2. FITTINGS MAY BE FLANGED OR MECHANICAL JOINT TYPE.
3. ALL FLANGED OR MECHANICAL JOINT CROSSES, TEES AND BENDS SHALL BE DUCTILE IRON (AWWA C-110 OR C-153) CLASS 150 AND COMPATIBLE WITH CAST IRON PIPE SIZE PVC. THE INTERIOR SURFACES SHALL BE CEMENT MORTAR LINED PER AWWA C-104 AND THE EXTERIOR SURFACES SHALL BE COAL TAR COATED PER AWWA C-203.
4. ALL BELOW GROUND NUTS, BOLTS AND MISCELLANEOUS STEEL SHALL BE POLYETHYLENE ENCASED AS PER AWWA C-105 OR TAPE WRAPPED PER AWWA C-209, 20 MILS MINIMUM IN BOTH CASES.
5. ALL THRUST BLOCKS SHALL BE CAST AGAINST UNDISTURBED NATIVE MATERIAL. NO BACKFILL ALLOWED BETWEEN UNDISTURBED NATIVE MATERIAL AND THRUST BLOCK.
6. IF THE MINIMUM DIMENSION "R" IS GREATER THAN THE TRENCH WIDTH, THE THRUST BLOCK SHALL BE REINFORCED WITH #4 REBAR GRID @ 12" O.C. EACH WAY AND LOCATED AS SHOWN.
7. THE CONCRETE SHALL HAVE A MINIMUM COMPRESSIVE STRENGTH OF 3,000 PSI. ALL CEMENT SHALL BE PORTLAND CEMENT, TYPE II, WITH A MINIMUM OF 5 SACKS OF CEMENT PER CUBIC YARD OF CONCRETE.
8. FOR DESIGN PRESSURES GREATER THAN 150 PSI, THRUST BLOCK DRAWINGS AND CALCULATIONS SHALL BE SUBMITTED TO THE CITY ENGINEER FOR APPROVAL.

CITY OF DIXON
ENGINEERING
STANDARD DETAIL

APPROVED: AUGUST 2014

FITTINGS & THRUST BLOCKS FOR VERTICAL UPWARD BENDS

W-5

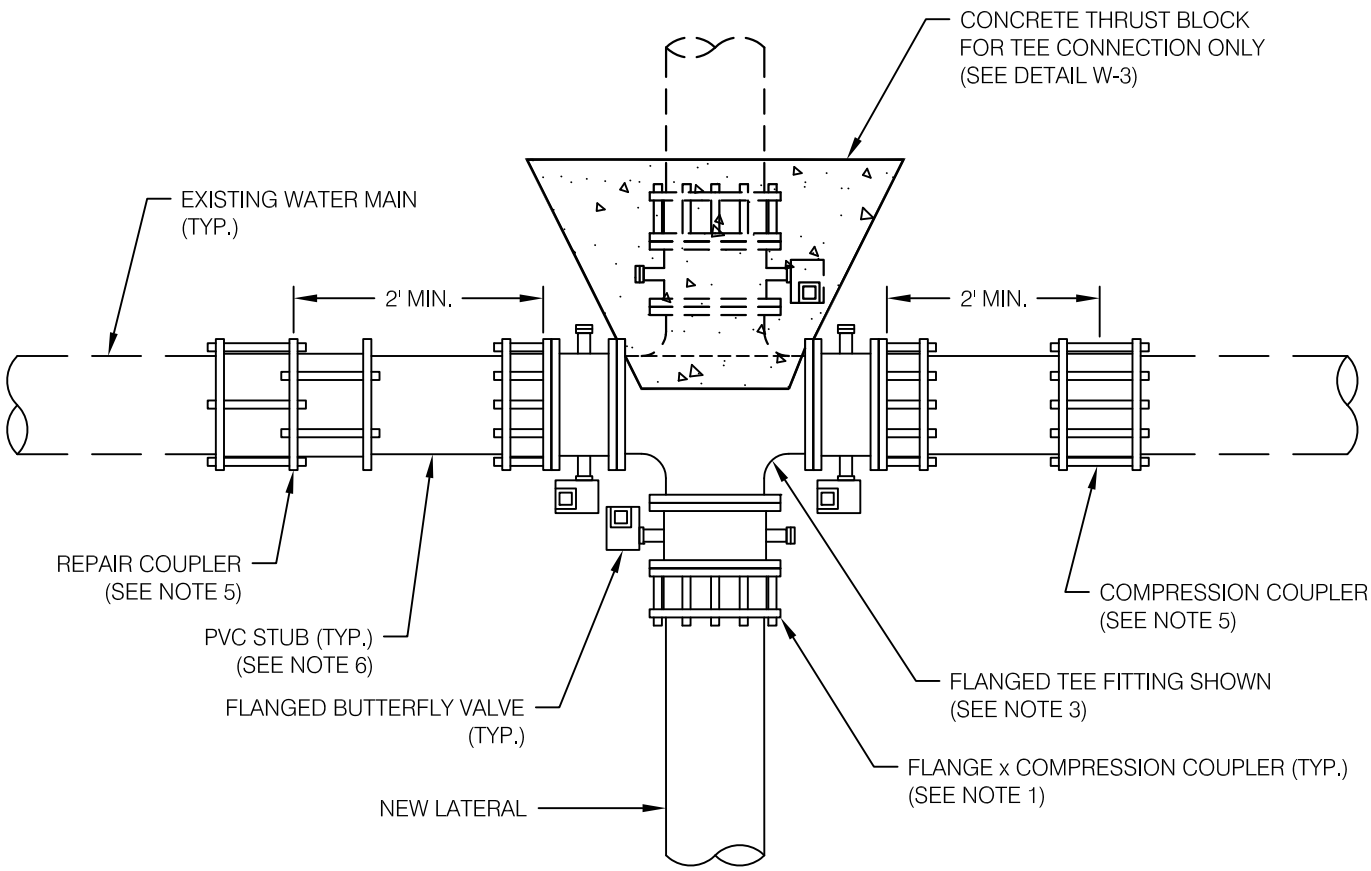

PLAN VIEW

ANGULAR PIPE DEFLECTION			
MAXIMUM VALUES			
PIPE SIZE	SLEEVE LENGTH		
	5"	7"	10"
4" - 14"	4°	4 1/2°	4 1/2°
16" - 24"	2°	4°	4 1/2°
26" - 36"	1 1/2°	3 1/2°	3 1/2°
Note: Deflection (in degrees) is PER COUPLER			

NOTES:

1. FLANGE BY COMPRESSION COUPLERS MAY BE FLANGE BY MECHANICAL JOINT OR FLANGED COUPLING ADAPTER.
2. FITTINGS MAY BE FLANGED OR MECHANICAL JOINT TYPE.
3. ALL FLANGED OR MECHANICAL JOINT CROSSES AND TEES SHALL BE DUCTILE IRON (AWWA C-110 OR C-153) CLASS 150 AND COMPATIBLE WITH CAST IRON PIPE SIZE PVC. THE INTERIOR SURFACES SHALL BE CEMENT MORTAR LINED PER AWWA C-104 AND THE EXTERIOR SURFACES SHALL BE COAL TAR COATED PER AWWA C-203.
4. ALL BELOW GROUND NUTS, BOLTS AND MISCELLANEOUS STEEL SHALL BE POLYETHYLENE ENCASED AS PER AWWA C-105 OR TAPE WRAPPED PER AWWA C-209, 20 MILS MINIMUM IN BOTH CASES.
5. COMPRESSION COUPLERS SHALL BE ROMAC STYLE "501" OR APPROVED EQUAL. FOR SEVERE ANGULAR PIPE DEFLECTION, ROMAC STYLE "RR501" REPAIR COUPLING SHALL BE USED OR APPROVED EQUAL.
6. PVC STUBS SHALL BE 2 FEET (2') MINIMUM IN LENGTH AND HAVE A CLASS AND PRESSURE RATING EQUAL TO, OR GREATER THAN, THE EXISTING WATER MAIN.
7. AT CONTRACTOR'S EXPENSE, ADDITIONAL FITTINGS AND PIPE SECTIONS MAY BE REQUIRED BY THE CITY ENGINEER TO ACCOMMODATE SEVERE MISALIGNMENTS IN THE PIPELINE AFTER IT HAS BEEN CUT.

CITY OF DIXON
ENGINEERING
STANDARD DETAIL

APPROVED: AUGUST 2014

"CUT-IN" TEE OR CROSS DETAIL FOR LATERAL CONNECTION

W-6

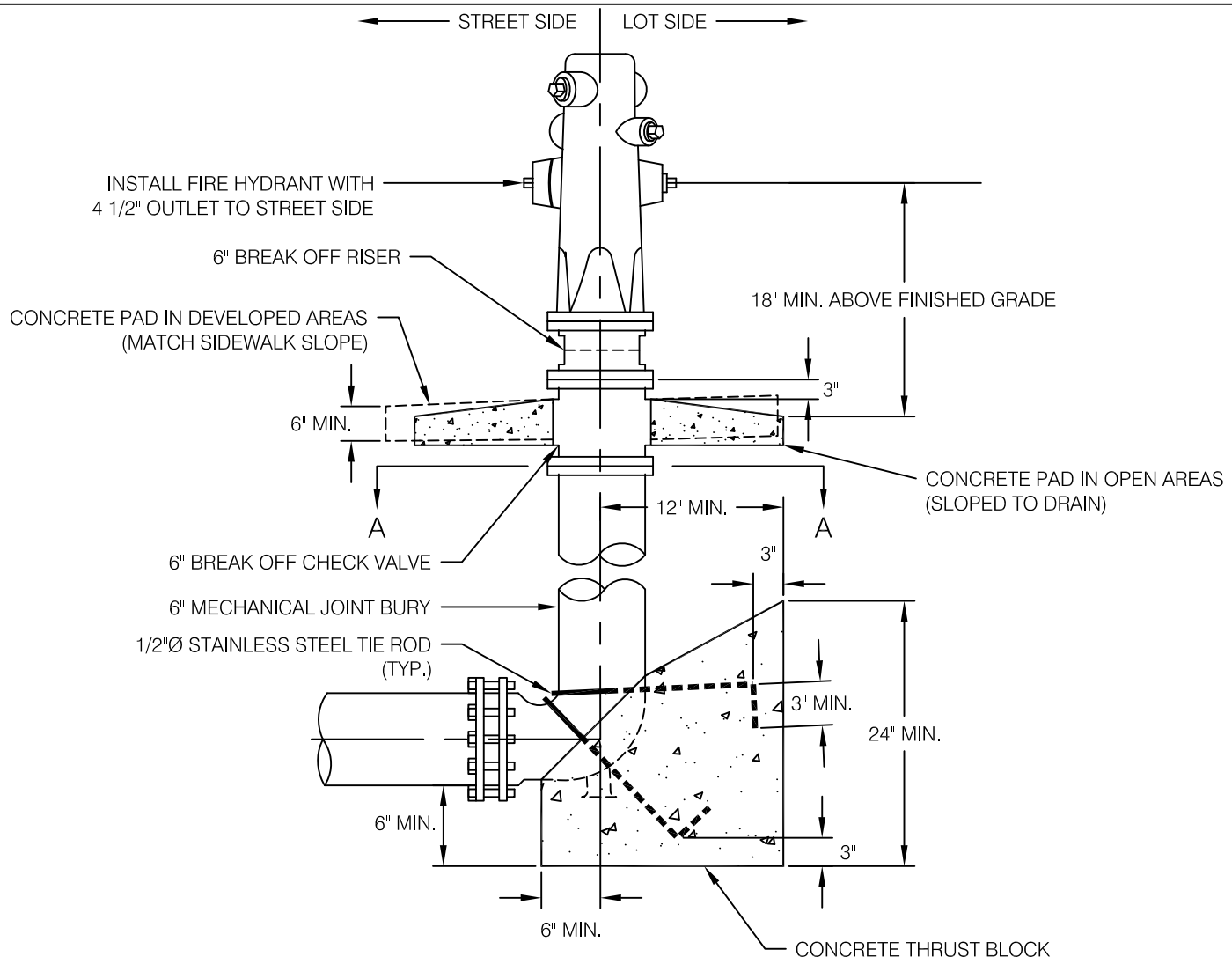

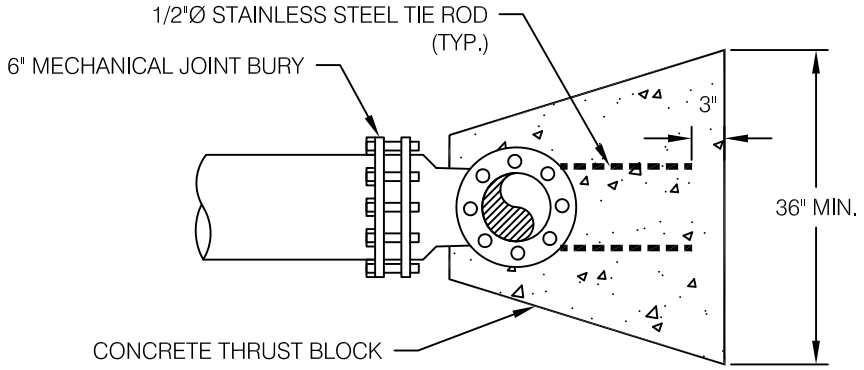

SECTION A-A

NOTES:

1. FIRE HYDRANT SHALL BE CLOW 960.
2. HYDRANT SHALL BE FURNISHED WITH FACTORY APPLIED "BRIGHT WHITE" EPOXY COATING. FIELD APPLIED TOUCH-UP MAY BE REQUIRED.
3. ALL EXPOSED METAL SHALL BE PROPERLY PREPARED AND PAINTED WITH BRIGHT WHITE INDUSTRIAL ENAMEL PAINT. FIELD APPLIED TOUCH-UP MAY BE REQUIRED.
4. ALL BELOW GROUND NUTS, BOLTS, AND MISCELLANEOUS STEEL SHALL BE POLYETHYLENE ENCASED AS PER AWWA C-105 OR TAPE WRAPPED AS PER AWWA C-209, 20 MILS MINIMUM IN BOTH CASES.
5. THE CONCRETE SHALL HAVE A MINIMUM COMPRESSIVE STRENGTH OF 3,000 PSI. ALL CONCRETE SHALL HAVE A MINIMUM OF 5 SACKS PORTLAND TYPE II CEMENT PER CUBIC YARD OF CONCRETE.
6. HYDRANT LATERAL SHALL BE INSTALLED AND BACKFILLED AS PER DETAIL W-1.

CITY OF DIXON ENGINEERING STANDARD DETAIL	APPROVED: AUGUST 2014	FIRE HYDRANT DETAIL	W-7

CITY OF DIXON
ENGINEERING
STANDARD DETAIL

APPROVED: AUGUST 2014

FIRE HYDRANT INSTALLATION FOR DEVELOPED AREAS

W-8

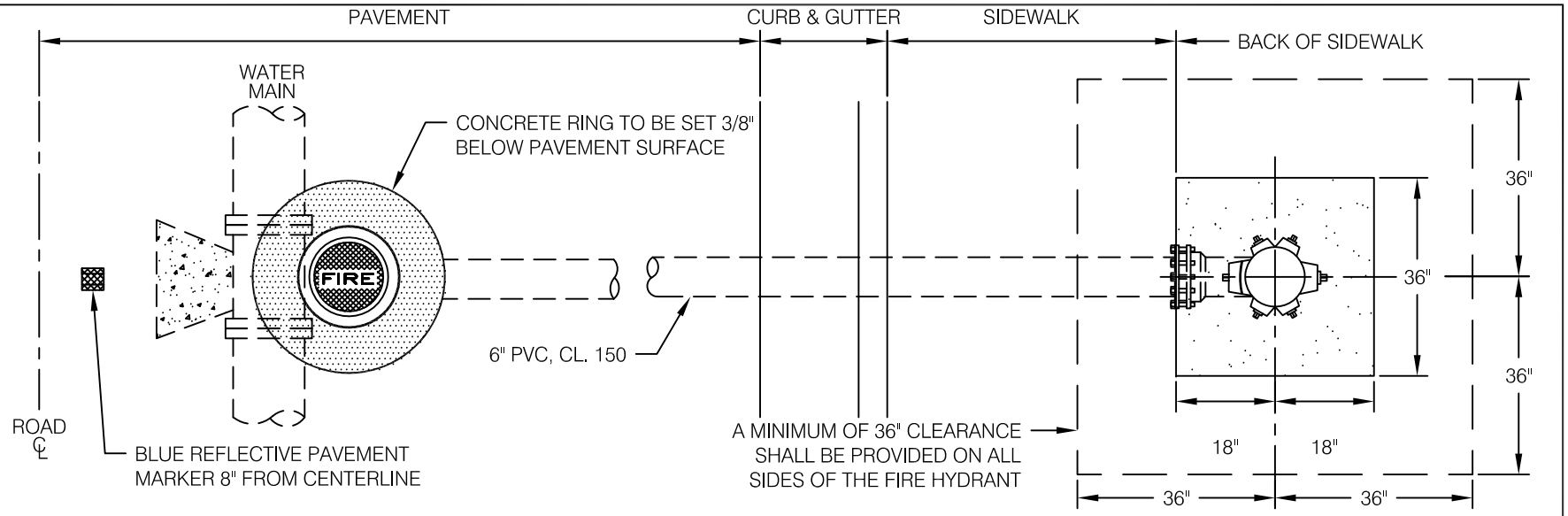

PLAN VIEW

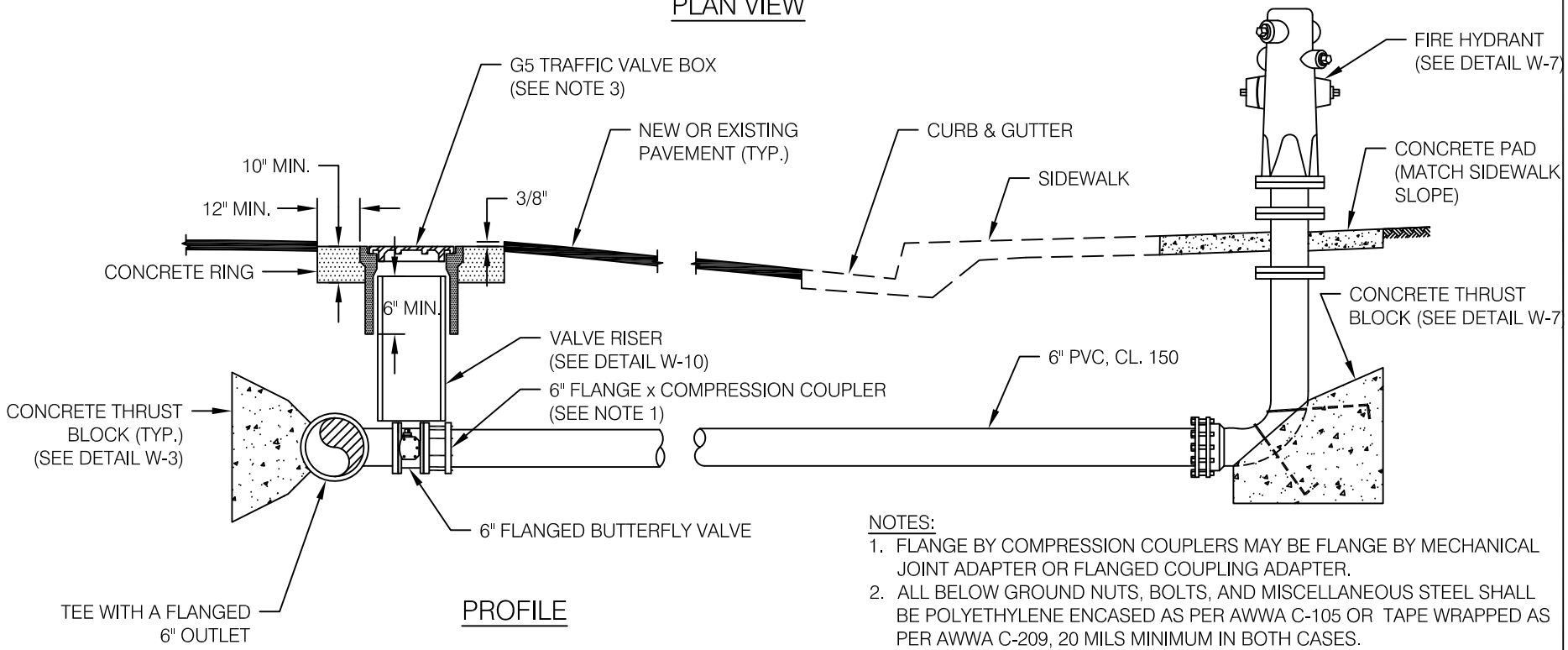

PROFILE

NOTES:

1. FLANGE BY COMPRESSION COUPLERS MAY BE FLANGE BY MECHANICAL JOINT ADAPTER OR FLANGED COUPLING ADAPTER.
2. ALL BELOW GROUND NUTS, BOLTS, AND MISCELLANEOUS STEEL SHALL BE POLYETHYLENE ENCASED AS PER AWWA C-105 OR TAPE WRAPPED AS PER AWWA C-209, 20 MILS MINIMUM IN BOTH CASES.
3. TRAFFIC VALVE BOX WILL BE MODEL G-5 WITH CAST IRON CIRCULAR LID MARKED "FIRE".
4. SEE DETAIL W-7 FOR OTHER NOTES AND DETAILS.

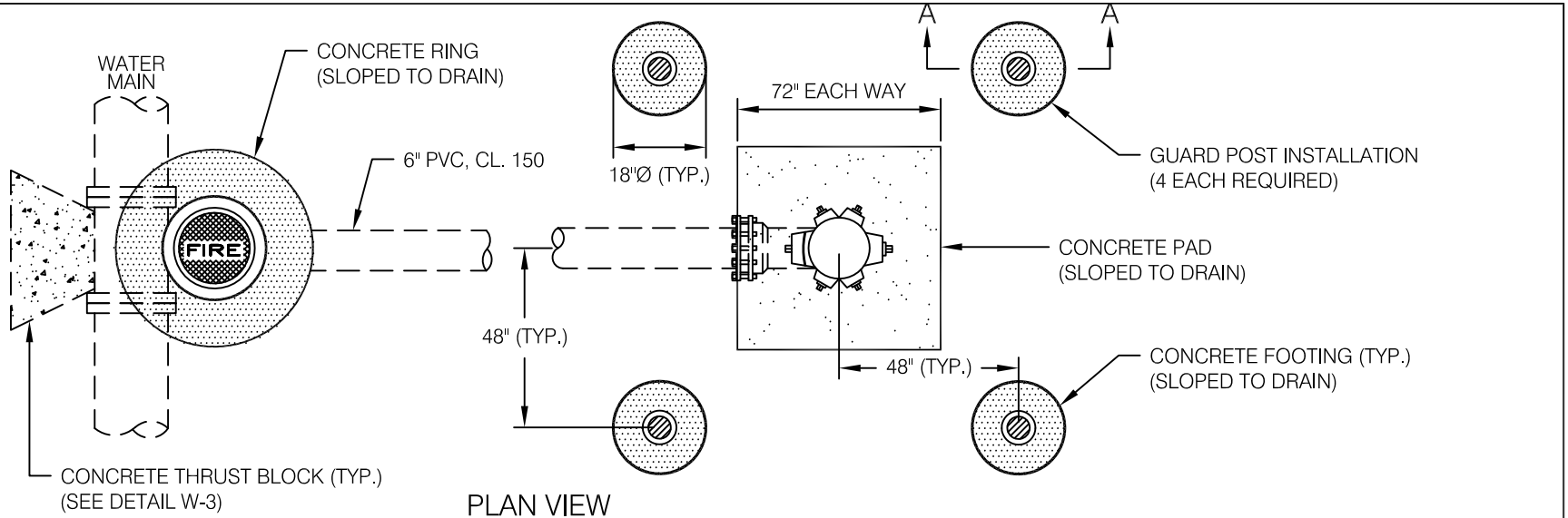

PLAN VIEW

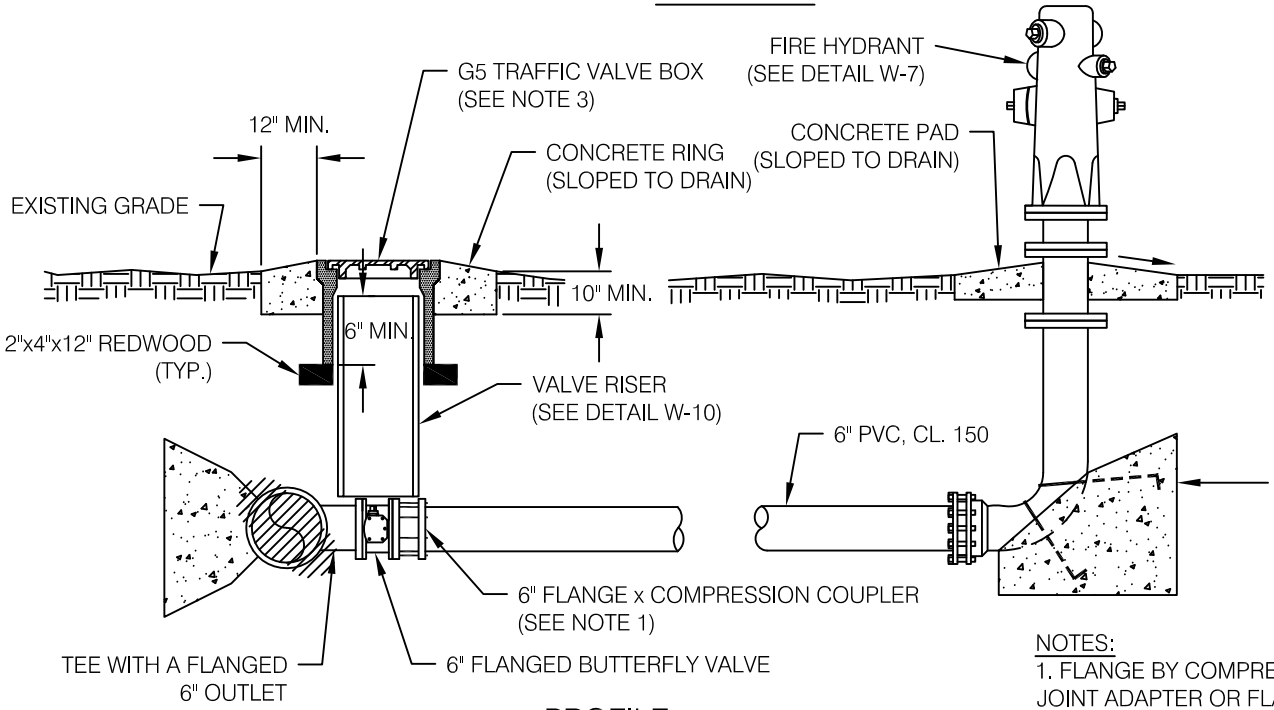

PROFILE

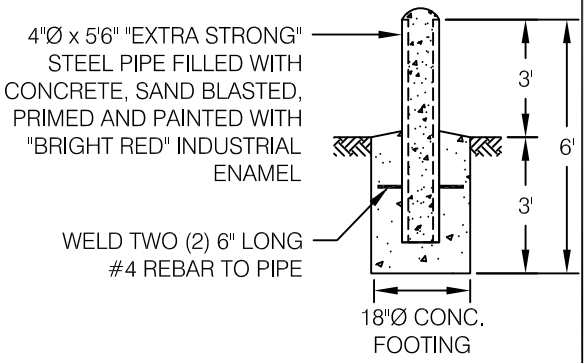

SECTION A-A
GUARD POST

NOTES:

1. FLANGE BY COMPRESSION COUPLERS MAY BE FLANGE BY MECHANICAL JOINT ADAPTER OR FLANGED COUPLING ADAPTER.
2. ALL BELOW GROUND NUTS, BOLTS, AND MISCELLANEOUS STEEL SHALL BE POLYETHYLENE ENCASED AS PER AWWA C-105 OR TAPE WRAPPED AS PER AWWA C-209, 20 MILS MINIMUM IN BOTH CASES.
3. TRAFFIC VALVE BOX WILL BE MODEL G-5 WITH CAST IRON CIRCULAR LID MARKED "FIRE".
4. SEE DETAIL W-7 FOR OTHER NOTES AND DETAILS.

DIXON CALIFORNIA

CITY OF DIXON
ENGINEERING
STANDARD DETAIL

APPROVED: AUGUST 2014

FIRE HYDRANT INSTALLATION FOR UNDEVELOPED AREAS

W-9

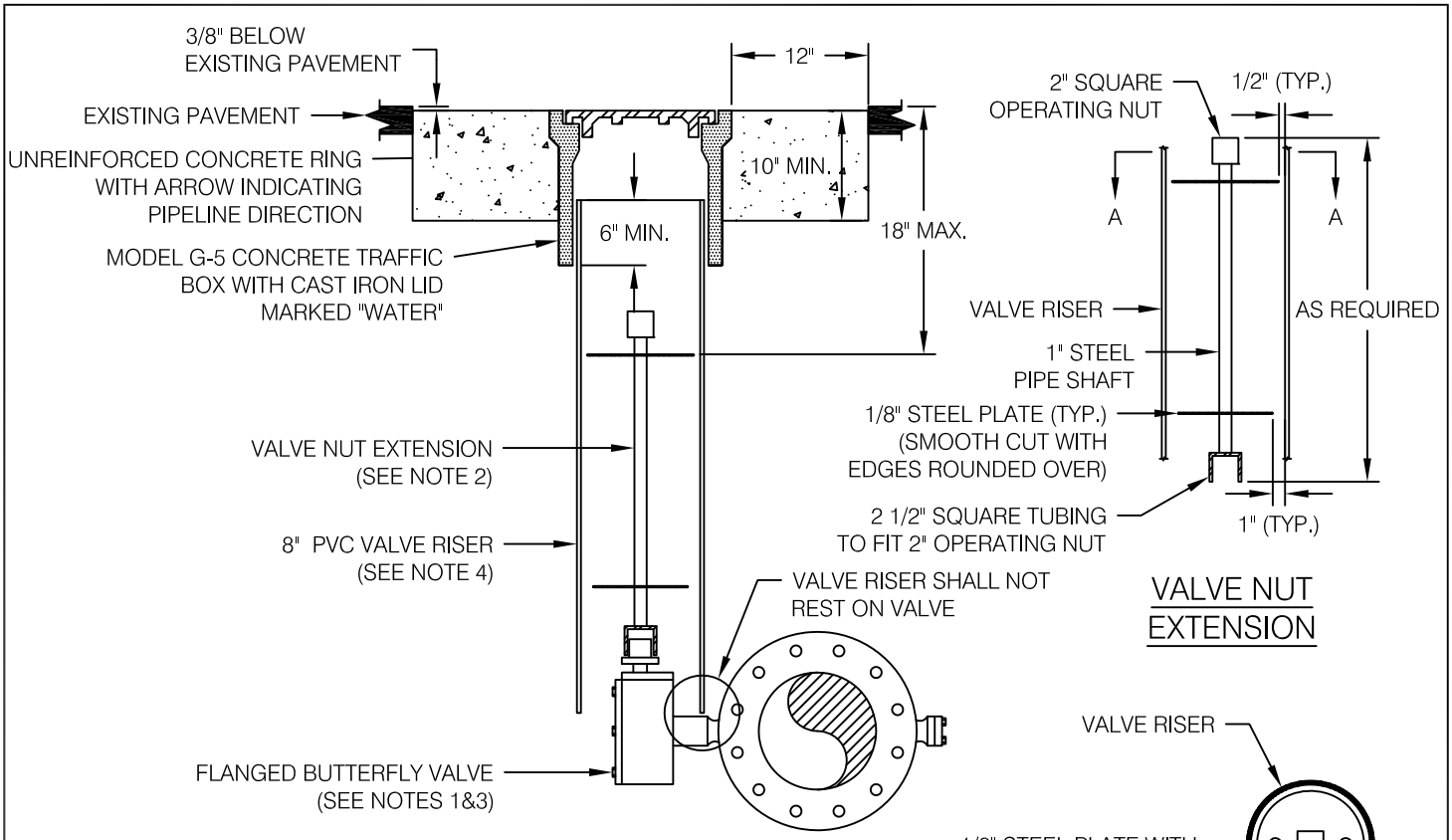

PAVED AREAS

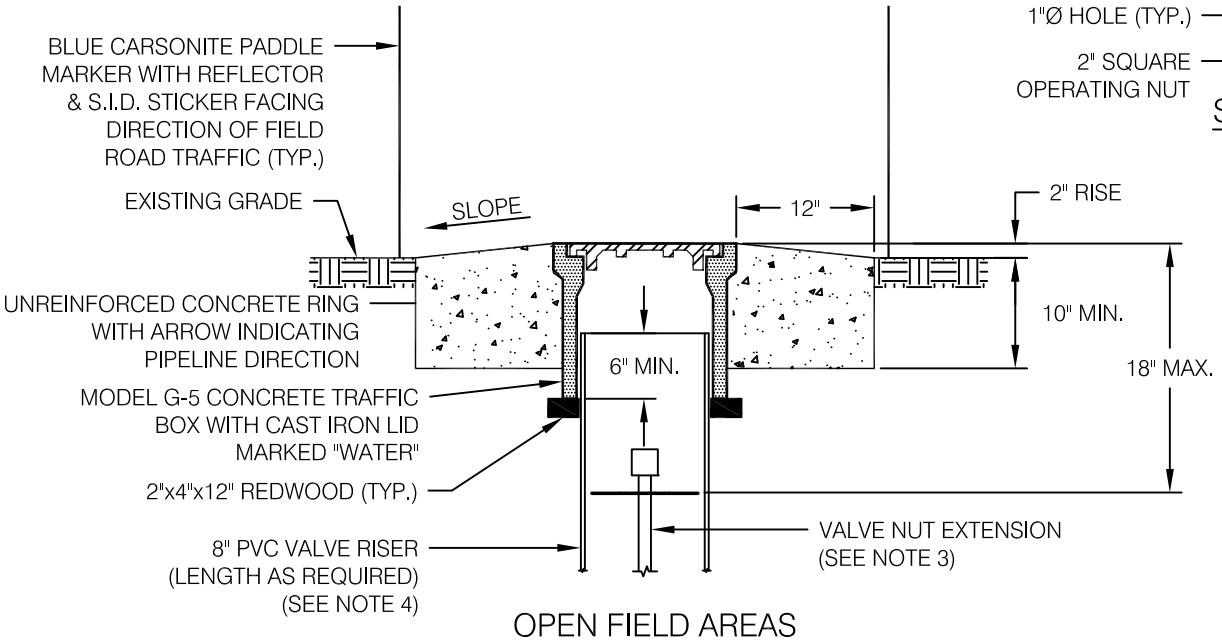

OPEN FIELD AREAS

NOTES:

1. ALL BUTTERFLY VALVES SHALL BE PRATT GROUNDHOG OR APPROVED EQUAL, FLANGED SHORT BODY, NOT WAFER TYPE, AND CONFORM TO AWWA C-504. BUTTERFLY VALVES SHALL BE FURNISHED WITH 2" SQUARE OPERATING NUT, CLOCKWISE TO CLOSE. EXTERIOR SURFACES SHALL BE COAL TAR COATED AS PER AWWA C-203 AND THE INTERIOR SHALL BE LINED WITH KEYSITE EPOXY #740, SCOTCHKOTE EPOXY #306 OR APPROVED EQUAL.
2. ALL BELOW GROUND NUTS, BOLTS AND MISCELLANEOUS STEEL SHALL BE POLYETHYLENE ENCASED AS PER AWWA C-105 OR TAPE WRAPPED AS PER AWWA C-209, 20 MILS MINIMUM IN BOTH CASES.
3. IF TOP OF OPERATING NUT ON THE BUTTERFLY VALVE EXCEEDS 42" FROM EXISTING PAVEMENT OR GRADE, A VALVE NUT EXTENSION SHALL BE REQUIRED.
4. VALVE RISER MAY BE NOTCHED AROUND VALVE SHAFT WITH THE CITY ENGINEER'S APPROVAL. VALVE RISER SHALL NOT REST ON VALVE.

CITY OF DIXON ENGINEERING STANDARD DETAIL	APPROVED: AUGUST 2014	TRAFFIC BOX AND VALVE DETAIL	W-10

CITY OF DIXON
ENGINEERING
STANDARD DETAIL

APPROVED: AUGUST 2014

¾ - 1" METER CONNECTION

W-11

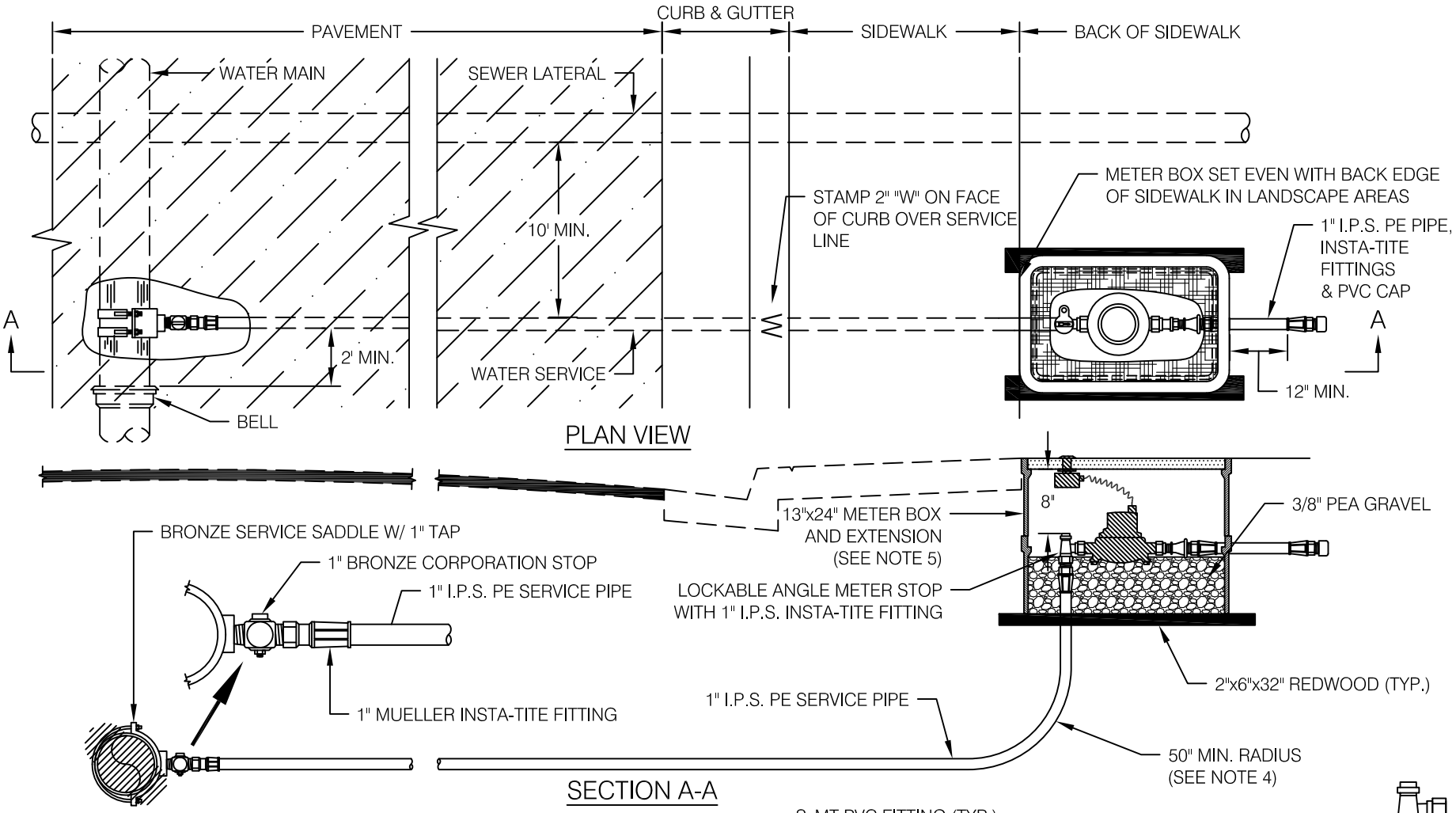

antenna

NOTES:

1. METER SHALL BE SENSUS MODEL SR II TOUCH READ WITH 520R PIT SET UNIT AND SHALL BE FURNISHED AND INSTALLED BY DSMWS AT THE CONTRACTOR'S EXPENSE.
2. IF THE METER IS NOT INSTALLED IMEDIATELY, THE CONTRACTOR SHALL FABRICATE AND INSTALL A JUMPER, LENGTH SHALL BE EQUAL TO THE LAY LENGTH OF THE METER TO BE INSTALLED, SEE DETAIL A.
3. 1" POLYETHYLENE PIPE SHALL BE IRON PIPE SIZE (I.P.S.) AND CONFORM TO ASTM D-2239, PE3408 WITH A PRESSURE RATING OF 200 PSI AND A SDR OF 7.
4. WHEN THE FIELD CONDITIONS WILL NOT ALLOW THE MINIMUM RADIUS, USE DETAIL B FOR THE REQUIRED INSTALLATION.
5. METER BOX AND EXTENSION SHALL BE LIGHTWEIGHT FIBERGLASS REINFORCED PLASTIC OR APPROVED EQUAL.

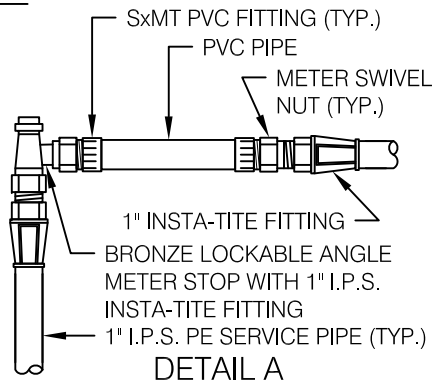

DETAIL A

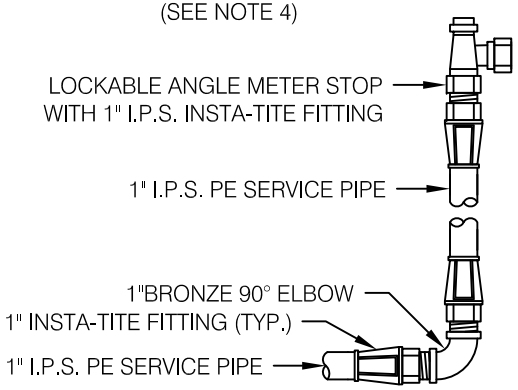

DETAIL B

CITY OF DIXON
ENGINEERING
STANDARD DETAIL

APPROVED: AUGUST 2014

3/4" - 1" DOUBLE METER CONNECTION

W-12

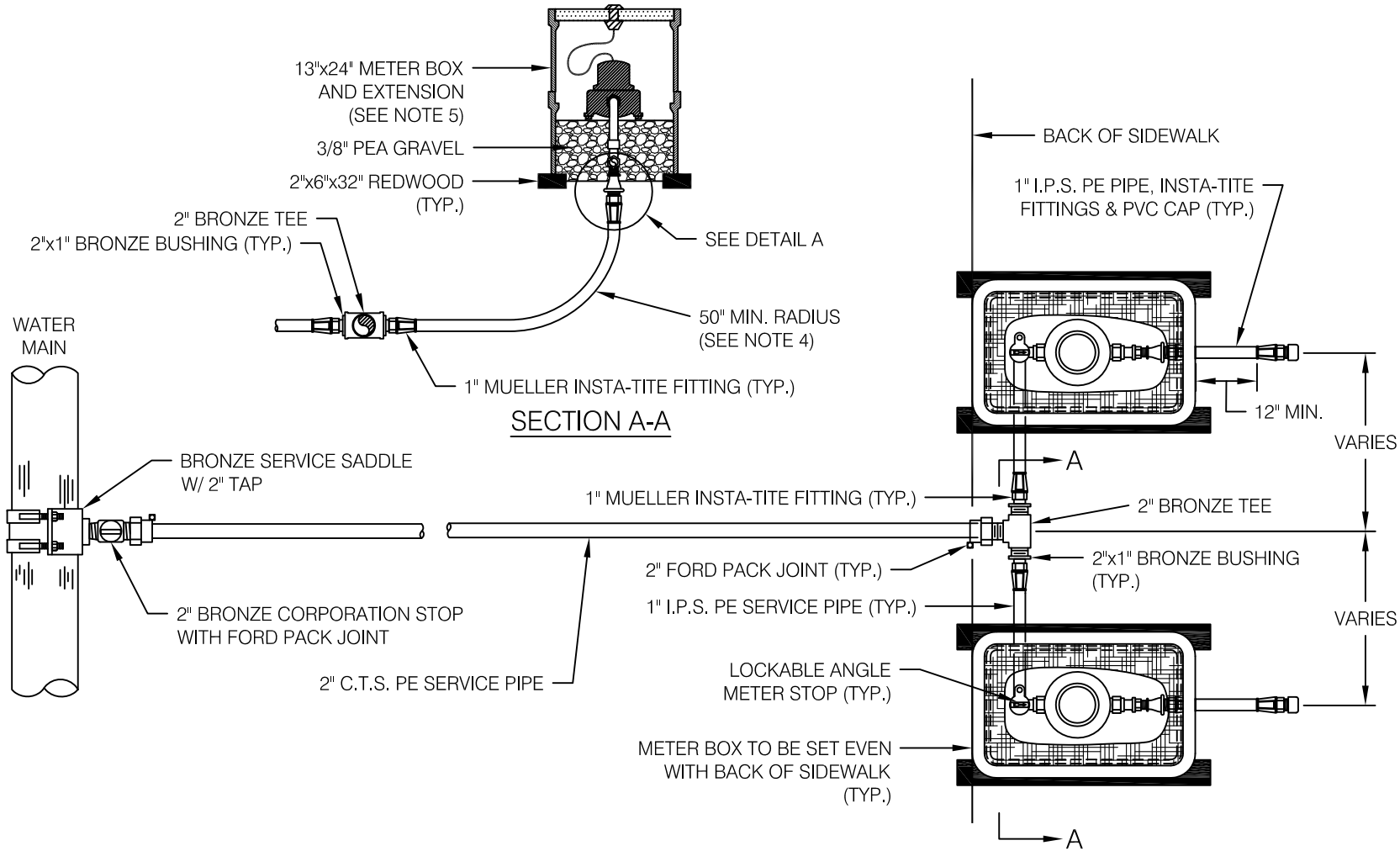

NOTES:

1. METER SHALL BE SENSUS MODEL SR II TOUCH READ WITH 520R PIT SET UNIT AND SHALL BE FURNISHED AND INSTALLED BY THE CITY AT THE CONTRACTOR'S EXPENSE.
2. IF THE METER IS NOT INSTALLED IMEDIATELY, THE CONTRACTOR SHALL FABRICATE AND INSTALL A JUMPER, LENGTH SHALL BE EQUAL TO THE LAY LENGTH OF THE METER TO BE INSTALLED, SEE DETAIL A.
3. 1" POLYETHYLENE PIPE SHALL BE IRON PIPE SIZE (I.P.S.) AND CONFORM TO ASTM D-2239, PE3408 WITH A PRESSURE RATING OF 200 PSI AND A SDR OF 7.
4. WHEN THE FIELD CONDITIONS WILL NOT ALLOW THE MINIMUM RADIUS, USE DETAIL B FOR THE REQUIRED INSTALLATION.
5. METER BOX AND EXTENSION SHALL BE LIGHTWEIGHT FIBERGLASS REINFORCED PLASTIC OR APPROVED EQUAL.

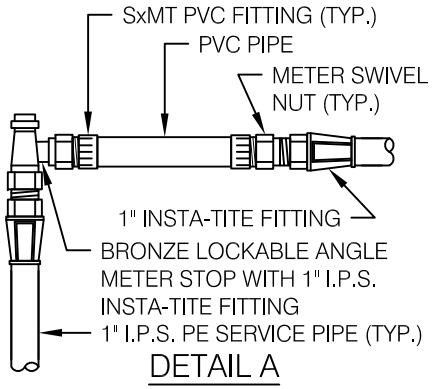

DETAIL A

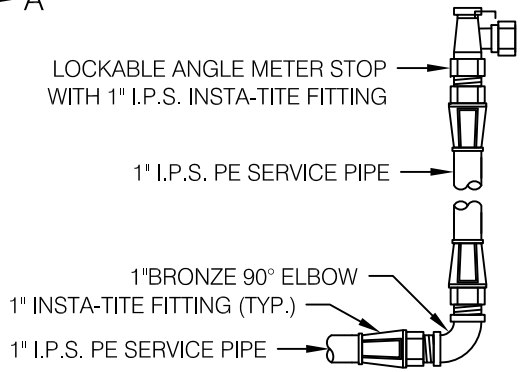

DETAIL B

CITY OF DIXON
ENGINEERING
STANDARD DETAIL

APPROVED: AUGUST 2014

1 ½" - 2" METER CONNECTION

W-13

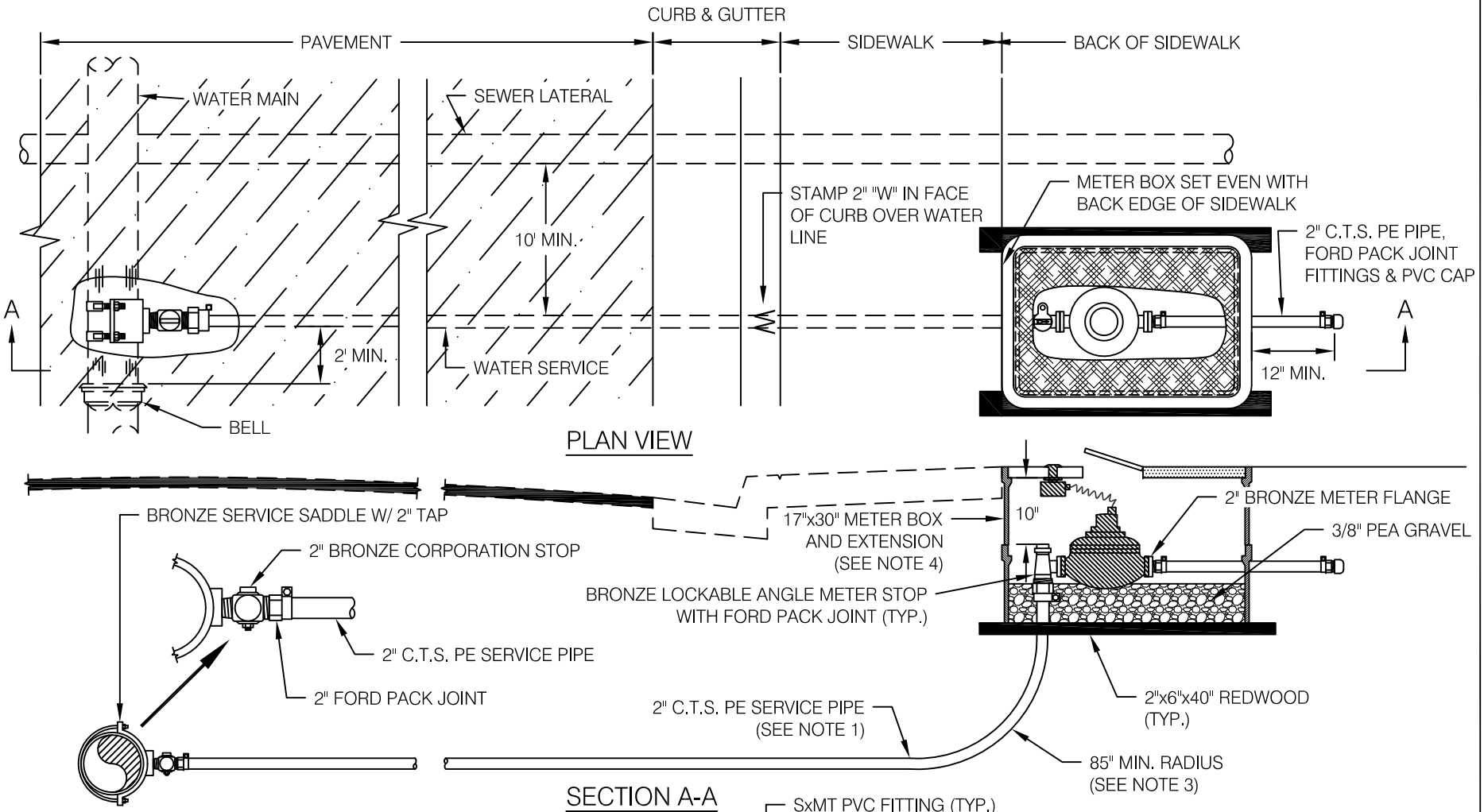

NOTES:

1. METER SHALL BE SENSUS MODEL SR II TOUCH READ WITH 520R PIT SET UNIT AND SHALL BE FURNISHED AND INSTALLED BY THE CITY AT THE CONTRACTOR'S EXPENSE. IF METER NOT IMMEDIATELY INSTALLED, CONTRACTOR SHALL INSTALL A TEMPORARY "JUMPER" EQUAL TO METER LENGTH (SEE DETAIL A).
2. POLYETHYLENE PIPE SHALL BE COPPER TUBE SIZE (C.T.S.) AND CONFORM TO ASTM D-2737, PE 3408 WITH A PRESSURE RATING OF 200 PSI AND A SDR OF 9.
3. WHEN FIELD CONDITIONS WILL NOT ALLOW THE MINIMUM RADIUS, USE DETAIL B FOR REQUIRED INSTALLATION.
4. METER BOX AND EXTENSION SHALL BE LIGHTWEIGHT FIBERGLASS REINFORCED PLASTIC OR APPROVED EQUAL.
5. SUBMIT DETAILS TO THE CITY ENGINEER FOR APPROVAL ON SERVICES LARGER THAN 2" IN SIZE.

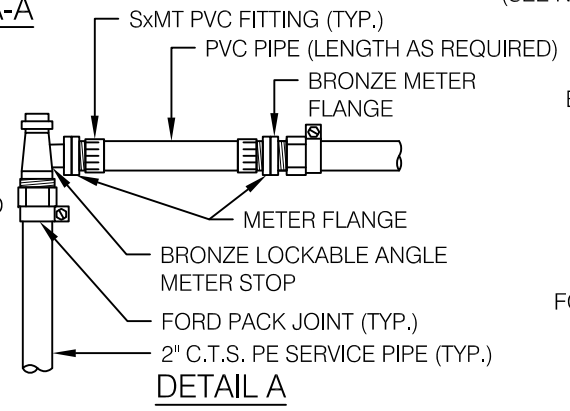

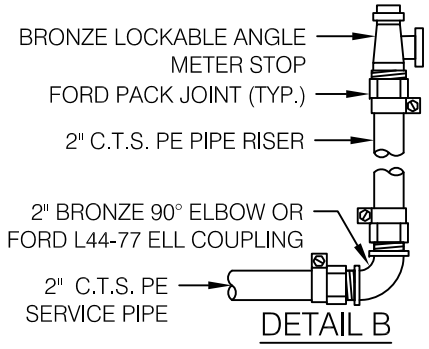

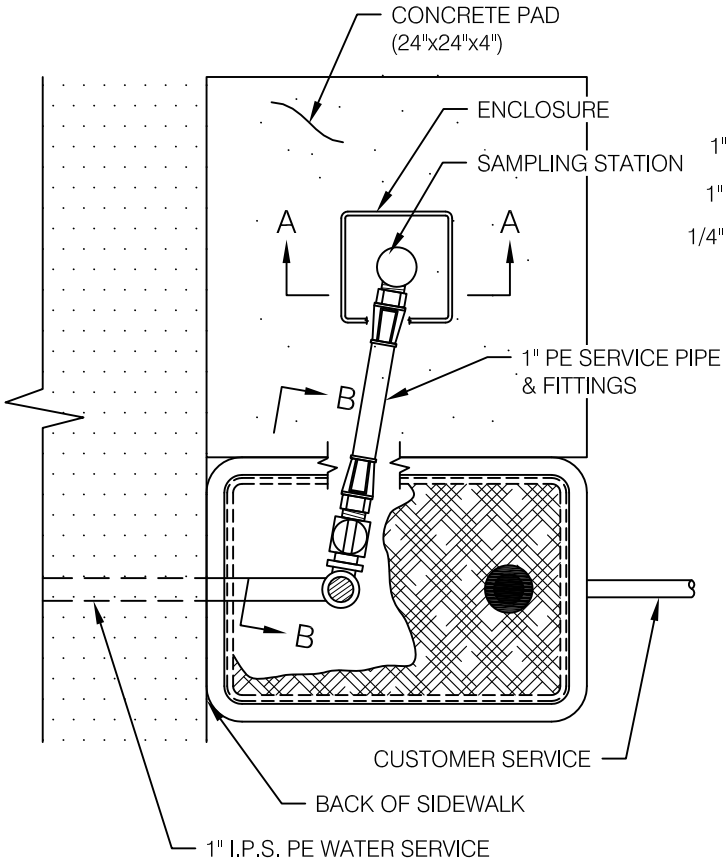

PLAN VIEW
(METER OMITTED FOR CLARITY)

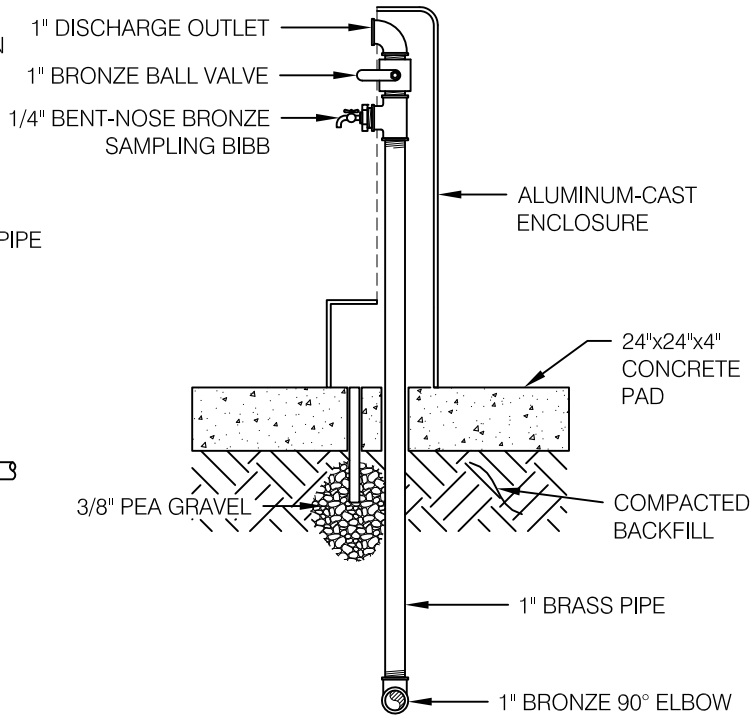

SECTION A-A

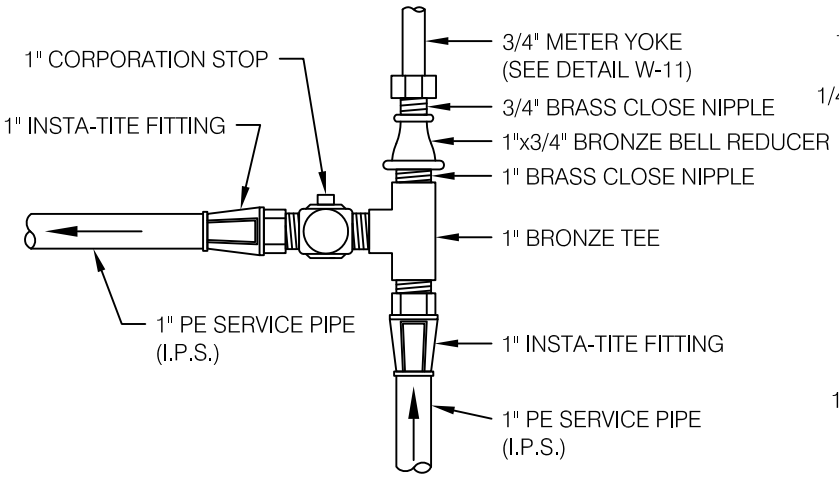

SECTION B-B

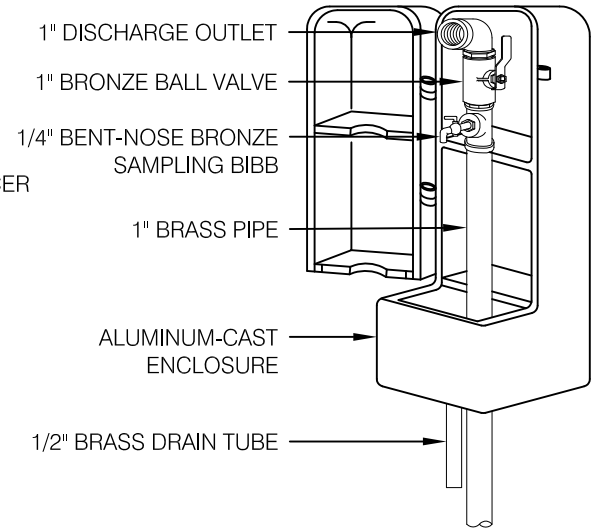

ECLIPSE No. 88-WC

NOTES:
1. SAMPLING STATION SHALL BE *THE KUPFERLE FOUNDRY COMPANY* "ECLIPSE No. 88-WC" OR APPROVED EQUAL.
2. SAMPLING STATION SHALL FACE TOWARD THE SIDEWALK.
3. FOR METER ASSEMBLY DETAIL SEE DETAIL W-11.
4. HOUSING TO BE PAINTED BOTH INSIDE AND OUTSIDE WITH INDUSTRIAL GRADE PRIMER AND "VISTA GREEN" ENAMEL PAINT.

CITY OF DIXON ENGINEERING STANDARD DETAIL	APPROVED: AUGUST 2014	¾" - 1" METER CONNECTION WITH SAMPLING STATION	W-14

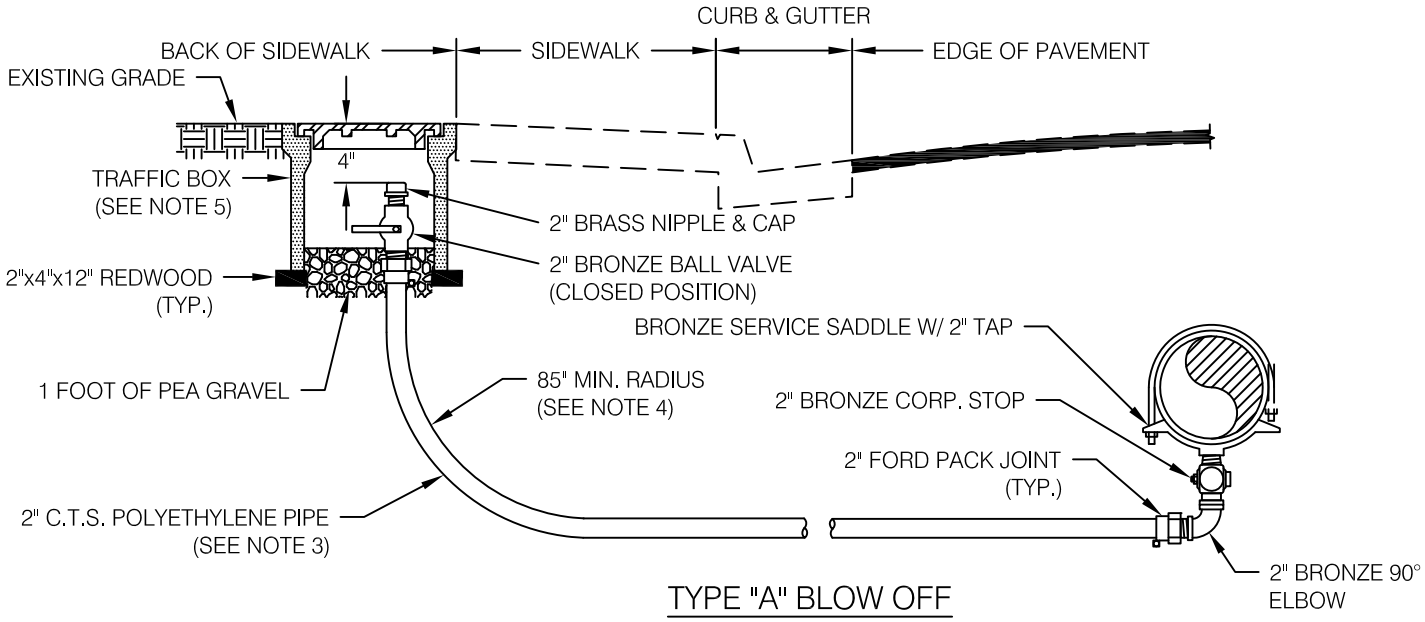

TYPE "A" BLOW OFF

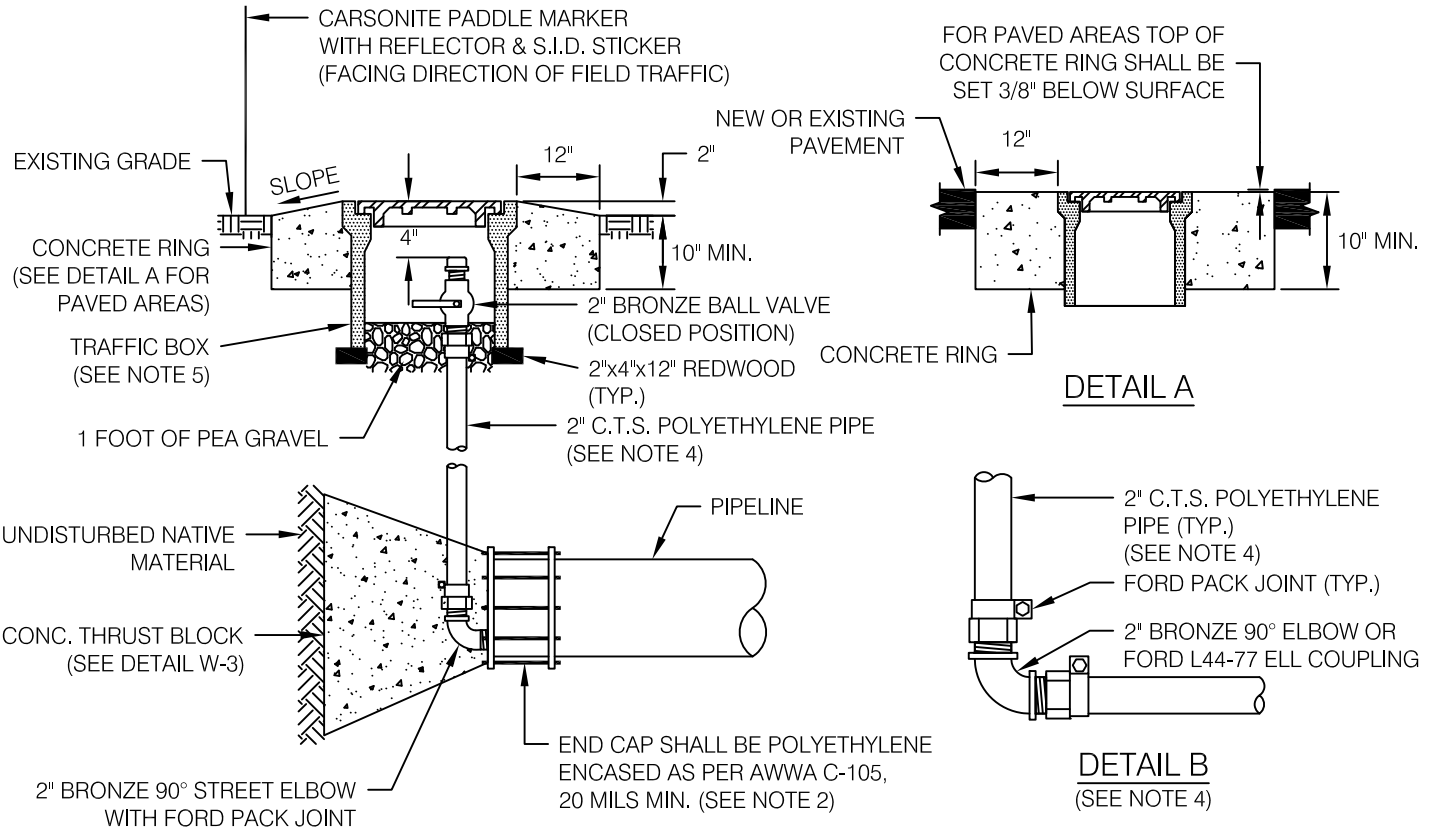

TYPE "B" BLOW OFF

NOTES:

1. BLOW OFFS SHALL BE INSTALLED ON ALL END RUNS OF WATER MAINS WHETHER TEMPORARY OR PERMANENT.
2. END CAP SHALL BE A ROMAC STYLE "EC501" END CAP COUPLING OR APPROVED EQUAL.
3. POLYETHYLENE PIPE SHALL BE COPPER TUBE SIZE (C.T.S.) AND CONFORM TO ASTM D-2737, PE 3408 WITH A PRESSURE RATING OF 200 PSI AND A SDR OF 9.
4. WHEN FIELD CONDITIONS WILL NOT ALLOW THE MINIMUM RADIUS, USE DETAIL B FOR REQUIRED INSTALLATION.
5. TRAFFIC VALVE BOX SHALL BE CHRISTY MODEL G-12 WITH CAST IRON LID MARKED "WATER" OR APPROVED EQUAL.

CITY OF DIXON ENGINEERING STANDARD DETAIL	APPROVED: AUGUST 2014	BLOW OFF ASSEMBLIES	W-15

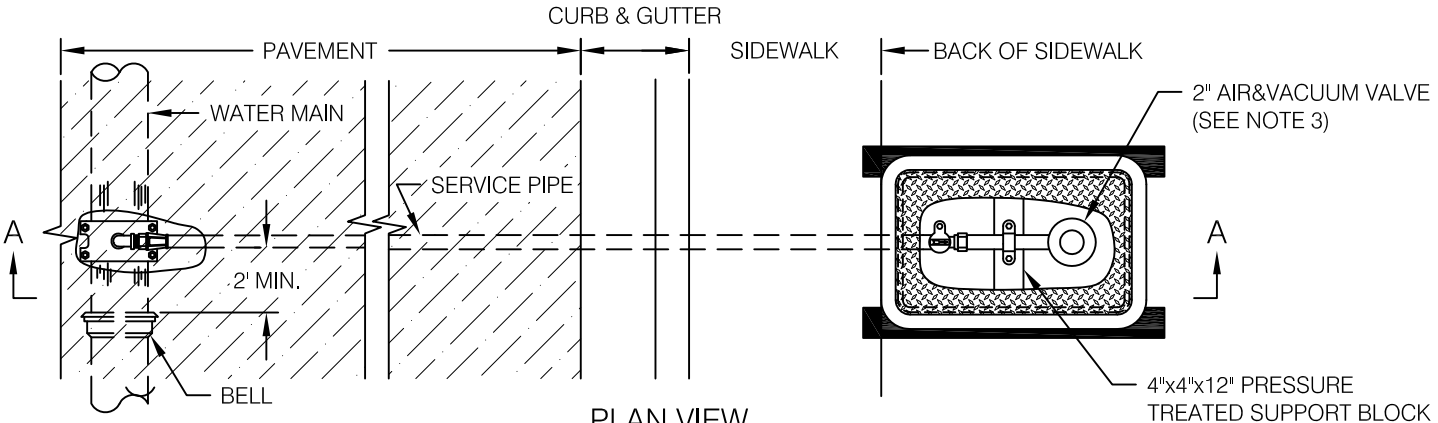

PLAN VIEW

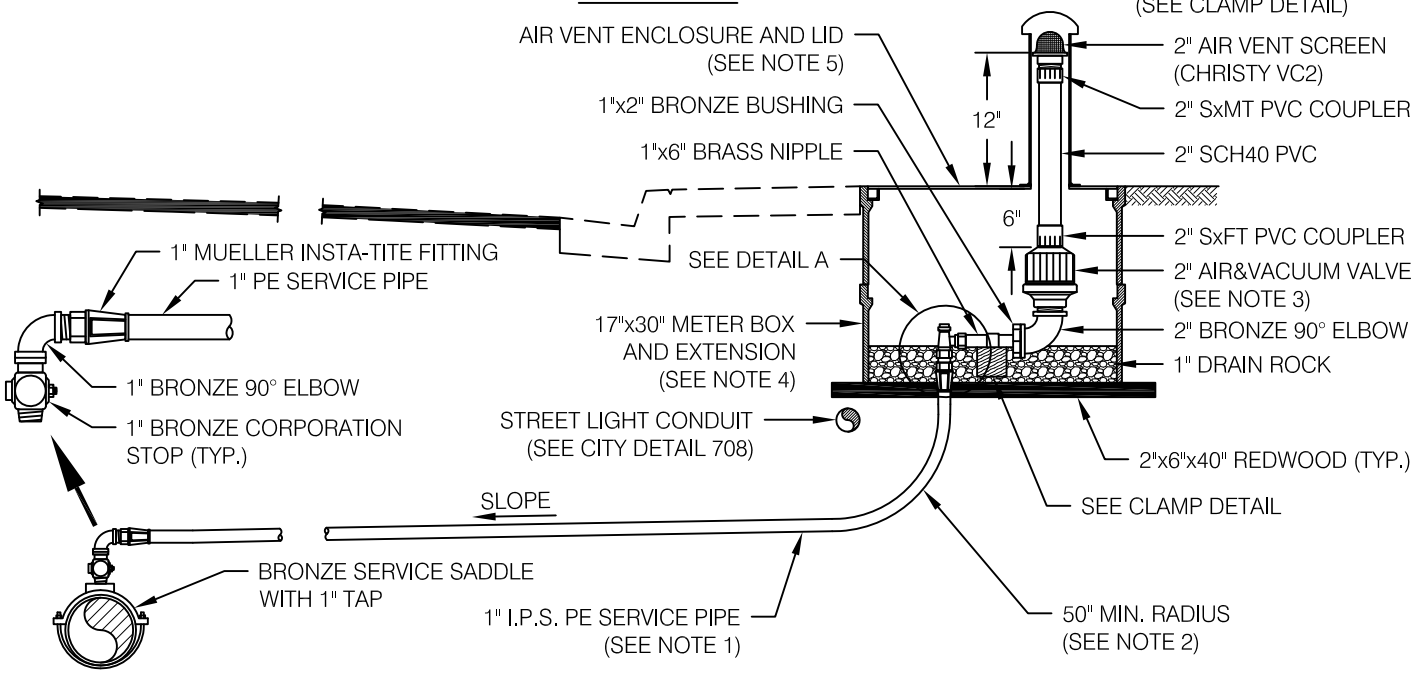

SECTION A-A

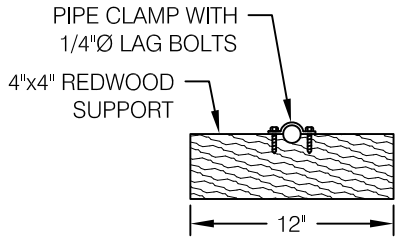

CLAMP DETAIL

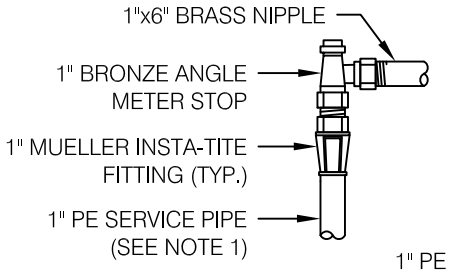

DETAIL A

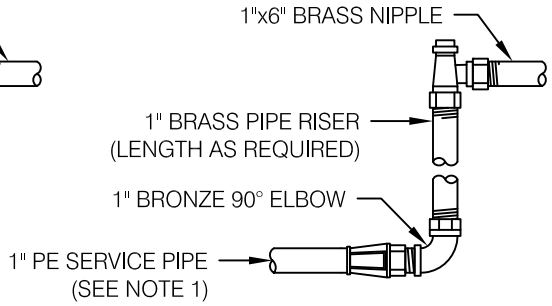

DETAIL B

NOTES:

1. 4"-12" WATER MAIN: 1" IRON PIPE SIZE (I.P.S.) POLYETHYLENE (PE) SERVICE PIPE SHALL BE USED (SHOWN) AND SHALL CONFORM TO ASTM D-2239, PE3408 WITH A PRESSURE RATING OF 200 PSI AND A SDR OF 7.
   14"-24" WATER MAIN: 2" COPPER TUBE SIZE (C.T.S.) POLYETHYLENE (PE) SERVICE PIPE SHALL BE USED AND SHALL CONFORM TO ASTM D-2737, PE 3408 WITH A PRESSURE RATING OF 200 PSI AND A SDR OF 9. APPROPRIATE 2" FITTINGS AND FORD COUPLERS SHALL BE USED, AS DIRECTED BY THE CITY ENGINEER. WHEN FIELD CONDITIONS WILL NOT ALLOW 85" MINIMUM RADIUS, USE DETAIL B FOR THE REQUIRED INSTALLATION.
2. WHEN THE FIELD CONDITIONS WILL NOT ALLOW THE MINIMUM RADIUS SHOWN, USE DETAIL B FOR THE REQUIRED INSTALLATION.
3. AIR & VACUUM VALVE SHALL BE BERMAD MODEL 4415.
4. METER BOX AND EXTENSION SHALL BE LIGHTWEIGHT FIBERGLASS REINFORCED PLASTIC OR APPROVED EQUAL.
5. AIR VENT ENCLOSURE AND LID SHALL BE *PLACER WATERWORKS* MODEL: PW/AE3618-MN OR APPROVED EQUAL.

CITY OF DIXON ENGINEERING STANDARD DETAIL	APPROVED: AUGUST 2014	AIR & VACUUM VALVE ASSEMBLY	W-16

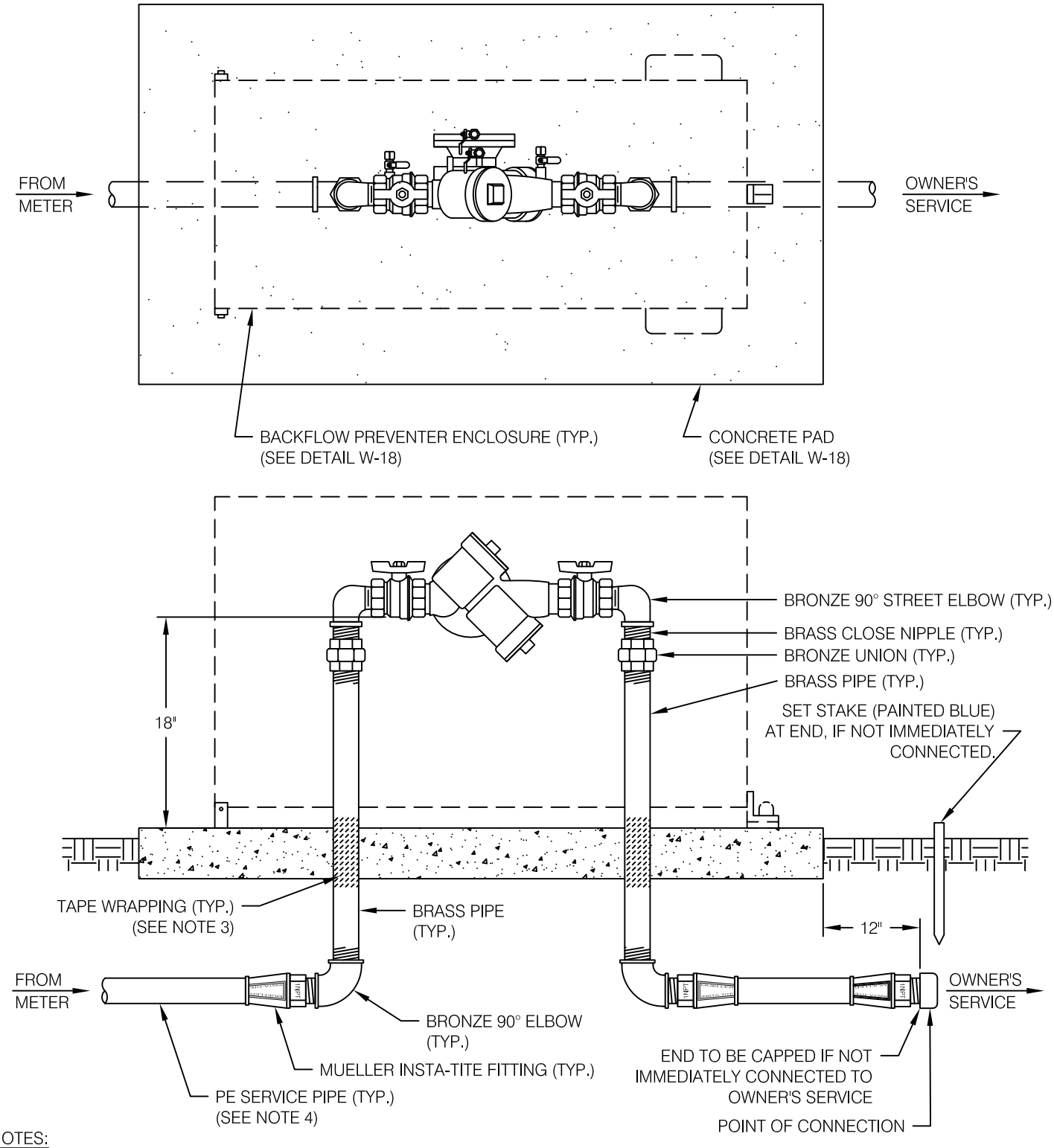

NOTES:

1. ALL BACKFLOW PREVENTERS SHALL BE FROM THE APPROVED LIST OF THE FOUNDATION FOR CROSS CONNECTION CONTROL AND HYDRAULIC RESEARCH AT THE UNIVERSITY OF SOUTHERN CALIFORNIA. THEY SHALL BE TESTED BY THE CITY PRIOR TO ACTIVATION.
2. EACH BACKFLOW PREVENTER SHALL HAVE FREEZE PROTECTION BAG, PROVIDED AND INSTALLED AT CONTRACTOR'S EXPENSE.
3. BRASS PIPING SHALL BE WRAPPED WITH PROTECTIVE TAPE, 20 MILS MINIMUM, THROUGH CONCRETE SLAB.
4. 1" IRON PIPE SIZE (I.P.S.) POLYETHYLENE (PE) SERVICE PIPE SHALL BE USED (SHOWN) AND SHALL CONFORM TO ASTM D-2239, PE3408 WITH A PRESSURE RATING OF 200 PSI AND A SDR OF 7.
   2" COPPER TUBE SIZE (C.T.S.) POLYETHYLENE (PE) SERVICE PIPE SHALL BE USED AND SHALL CONFORM TO ASTM D-2737, PE 3408 WITH A PRESSURE RATING OF 200 PSI AND A SDR OF 9. APPROPRIATE 2" FITTINGS AND FORD COUPLERS SHALL BE USED, AS DIRECTED BY THE CITY ENGINEER.
5. SEE DETAIL W-18 FOR BACKFLOW PREVENTER ENCLOSURE AND CONCRETE PAD DETAILS.

CITY OF DIXON ENGINEERING STANDARD DETAIL	APPROVED: AUGUST 2014	¾" - 2" REDUCED PRESSURE BACKFLOW PREVENTER INSTALLATION	W-17

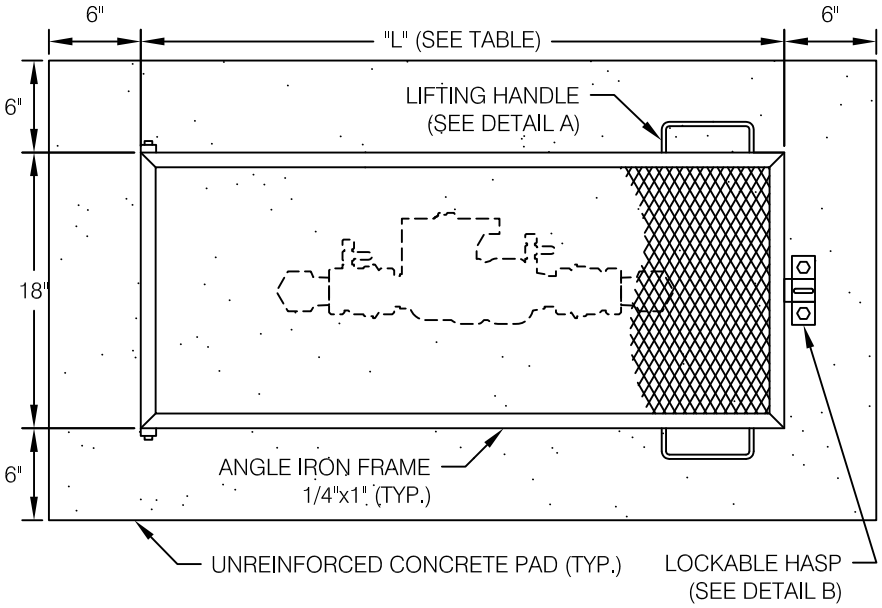

TABLE	
BFP SIZE	L
3/4" - 1"	30"
1-1/2" - 2"	42"

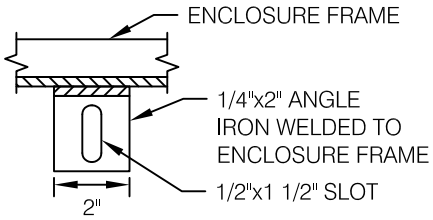

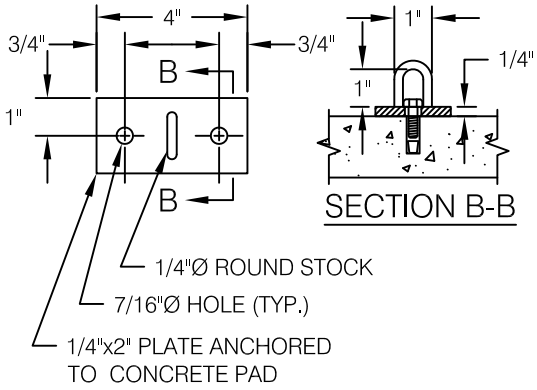

DETAIL B

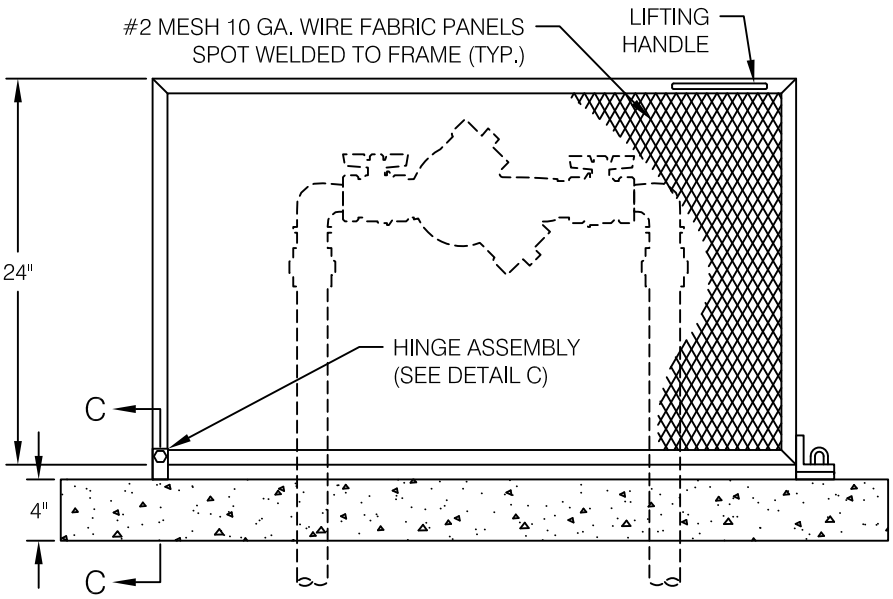

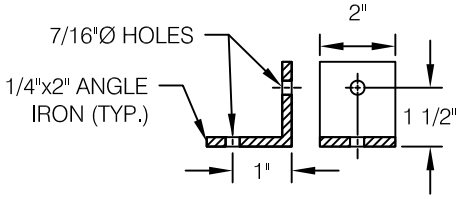

DETAIL C

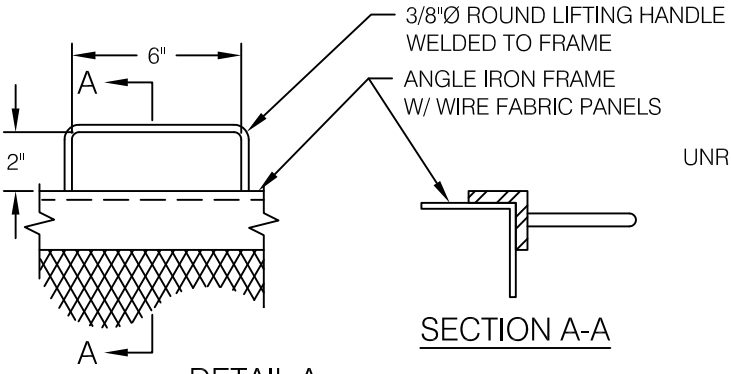

DETAIL A

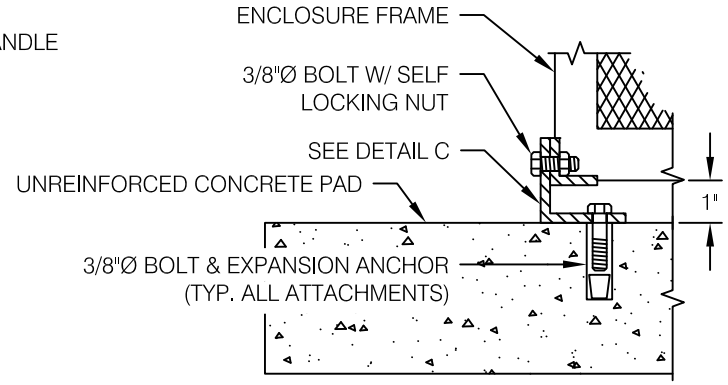

SECTION C-C

NOTES:

1. CONTRACTOR MAY INSTALL A PREFABRICATED PROTECTIVE ENCLOSURE, TO THE SPECIFICATIONS SHOWN. ENCLOSURE DETAILS SHALL BE SUBMITTED TO THE CITY ENGINEER FOR APPROVAL.
2. THE BACKFLOW PREVENTER PROTECTIVE ENCLOSURE SHALL BE POWDER COATED "GREEN" AND MISCELLANEOUS STEEL SHALL BE GALVANIZED.
3. THE CONCRETE SHALL HAVE A MINIMUM COMPRESSIVE STRENGTH OF 3,000 PSI. ALL CEMENT SHALL BE PORTLAND TYPE II WITH A MINIMUM OF 5 SACKS OF CEMENT PER CUBIC YARD OF CONCRETE.

CITY OF DIXON
ENGINEERING
STANDARD DETAIL

APPROVED: AUGUST 2014

REDUCED PRESSURE
BACKFLOW PREVENTER
PROTECTIVE ENCLOSURE

W-18

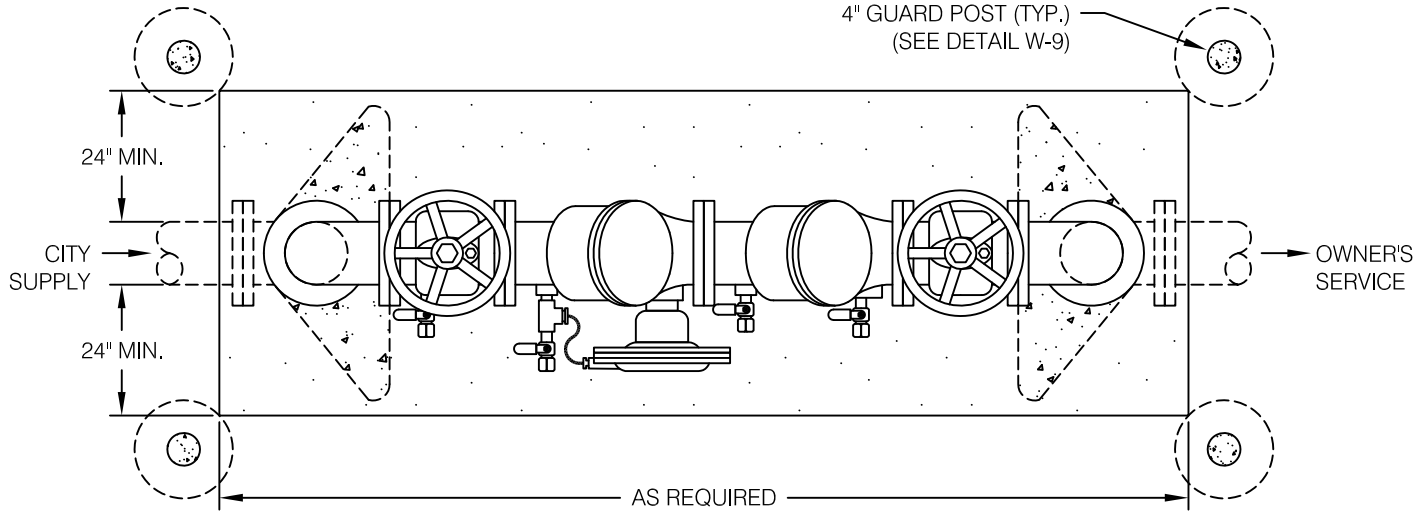

PLAN VIEW

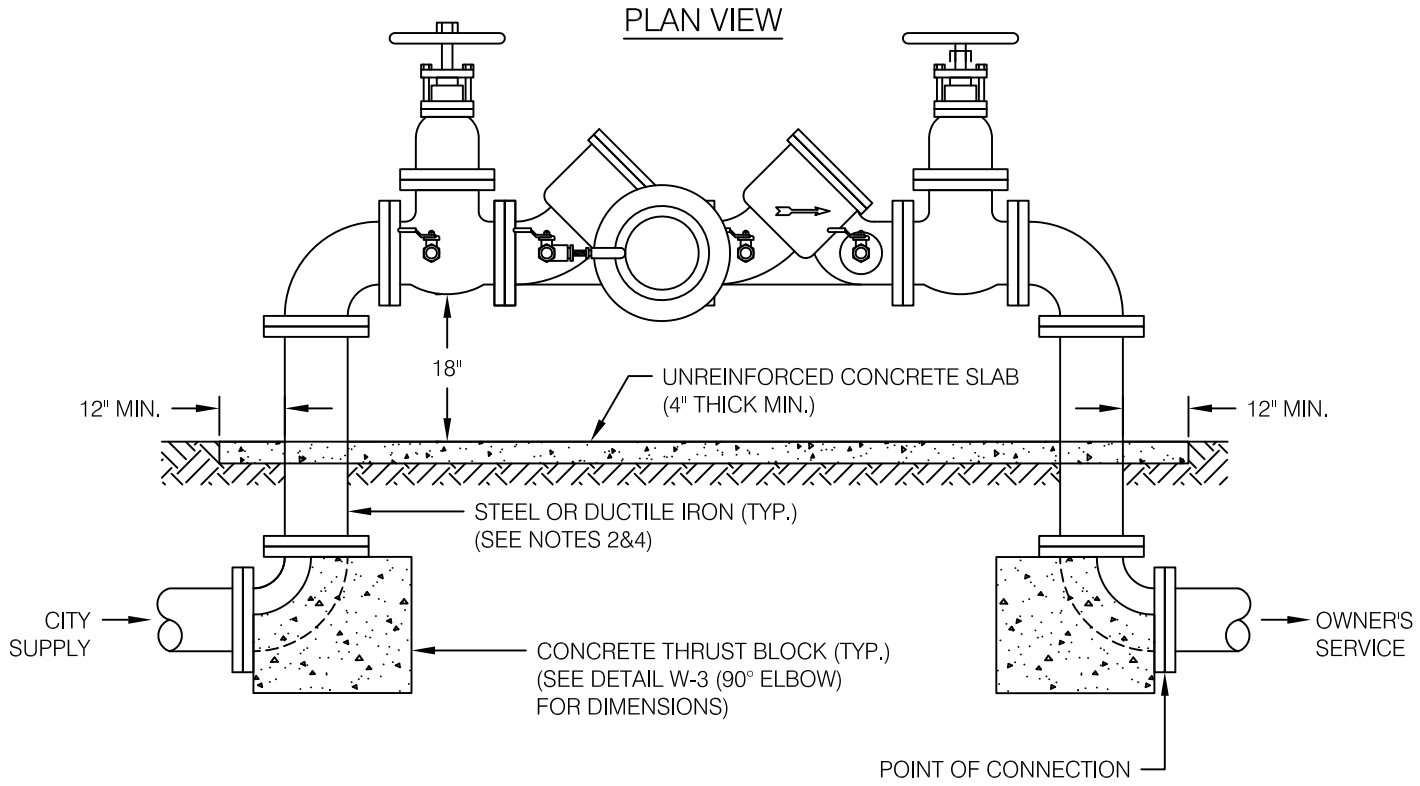

PROFILE

(GUARD POSTS NOT SHOWN FOR CLARITY)

NOTES:

1. ALL BACKFLOW PREVENTERS SHALL BE FROM THE APPROVED LIST OF THE FOUNDATION FOR CROSS CONNECTION CONTROL AND HYDRAULIC RESEARCH AT THE UNIVERSITY OF SOUTHERN CALIFORNIA. THEY SHALL BE TESTED BY THE CITY PRIOR TO ACTIVATION.
2. ALL STEEL PIPE SHALL BE 1/4" WALL AS PER AWWA C-200; LINED AND COATED WITH FUSION BONDED EPOXY AS PER AWWA C-213, 20 MILS MINIMUM.
3. ALL STEEL FLANGES SHALL BE CLASS D AS PER AWWA C-207.
4. ALL DUCTILE IRON FITTINGS SHALL MEET AWWA C-110 & C-153, CLASS 150. THE INTERIOR SHALL BE MORTAR LINED AS PER AWWA C-104 AND THE EXTERIOR SHALL HAVE A COAL TAR COATING AS PER AWWA C-203.
5. ALL NUTS AND BOLTS BELOW GROUND SHALL BE POLYETHYLENE ENCASED AS PER AWWA C-105 OR TAPE WRAPPED AS PER AWWA C-209, 20 MILS MINIMUM IN BOTH CASES.
6. BACKFLOW PREVENTER ASSEMBLY SHALL BE PROPERLY PREPARED AND PAINTED WITH "VISTA GREEN" INDUSTRIAL ENAMEL PAINT AFTER FINAL TEST.
7. BACKFLOW PREVENTER SHALL HAVE A FREEZE PROTECTION BLANKET PROVIDED AND INSTALLED BY THE CONTRACTOR AT THE CONTRACTOR'S EXPENSE. BLANKET DESIGN DRAWINGS CAN BE OBTAINED FROM THE CITY ENGINEER.

CITY OF DIXON ENGINEERING STANDARD DETAIL	APPROVED: AUGUST 2014	3" - 10" REDUCED PRESSURE BACKFLOW PREVENTER INSTALLATION	W-19

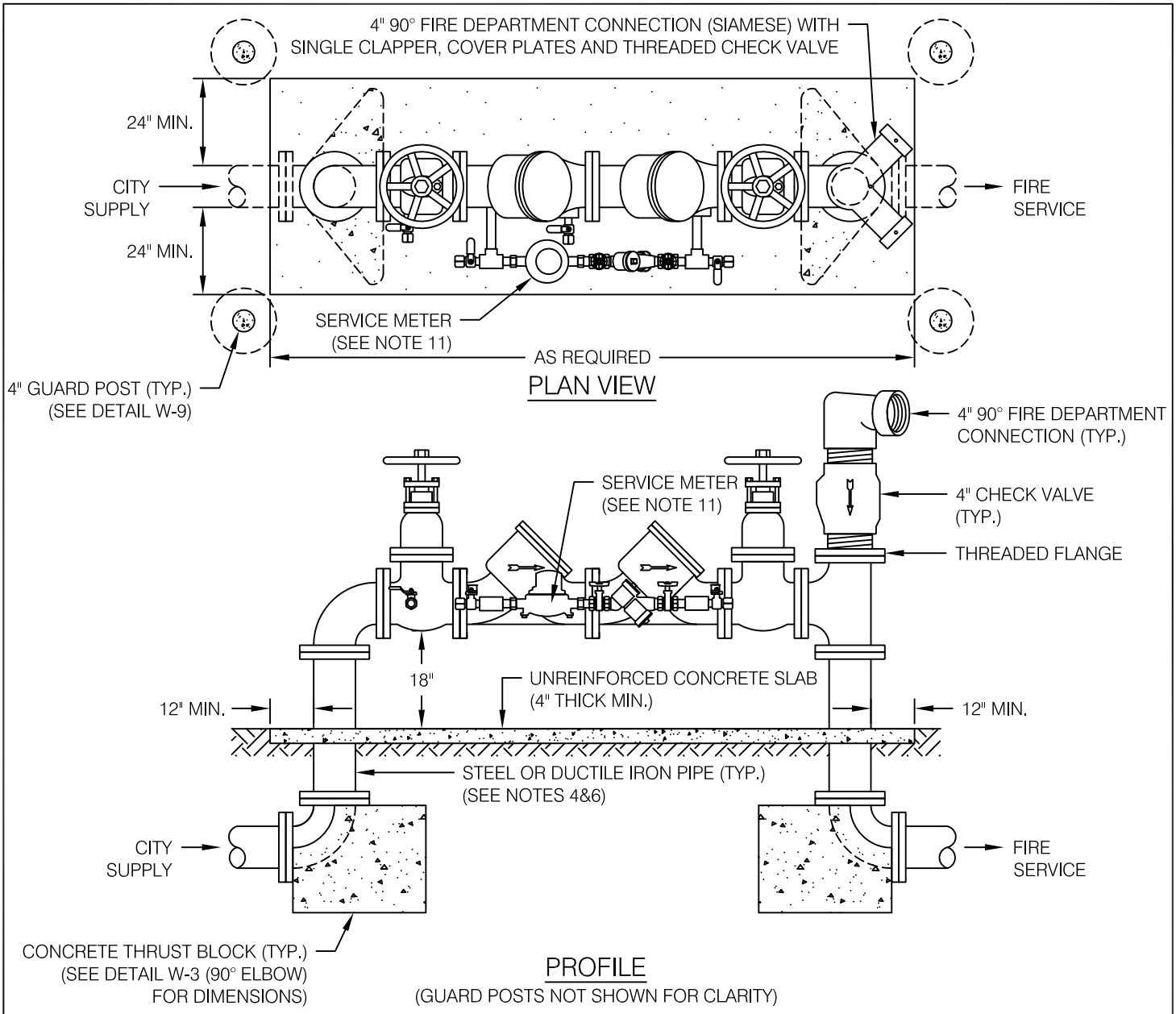

NOTES:

1. ALL BACKFLOW PREVENTERS SHALL BE FROM THE APPROVED LIST OF THE FOUNDATION FOR CROSS CONNECTION CONTROL AND HYDRAULIC RESEARCH AT THE UNIVERSITY OF SOUTHERN CALIFORNIA. THEY SHALL BE TESTED BY THE CITY PRIOR TO ACTIVATION.
2. BACKFLOW PREVENTER MUST BE CHAINED OPEN AND HAVE TAMPER SWITCHES INSTALLED FOR SPRINKLER SYSTEMS.
3. FIRE DEPARTMENT CONNECTION SHALL CONSIST OF TWO 2-1/2" FEMALE CONNECTIONS, UNLESS OTHERWISE SPECIFIED, WITH METAL COVER PLATES ONLY, AND MUST BE FM/UL APPROVED WITH STAMPED MARKINGS ON THE DEVICE.
4. ALL STEEL PIPE SHALL BE 1/4" WALL AS PER AWWA C-200; LINED AND COATED WITH FUSION BONDED EPOXY AS PER AWWA C-213, 20 MILS MINIMUM.
5. ALL STEEL FLANGES SHALL BE CLASS D AS PER AWWA C-207.
6. ALL DUCTILE IRON PIPE AND FITTINGS SHALL MEET AWWA C-110 & C-153, CLASS 150. THE INTERIOR SHALL BE MORTAR LINED AS PER AWWA C-104 AND EXTERIOR SHALL HAVE A COAL TAR COATING AS PER AWWA C-203.
7. ALL NUTS AND BOLTS BELOW GROUND SHALL BE POLYETHYLENE ENCASED AS PER AWWA C-105 OR TAPE WRAPPED AS PER AWWA C-209, 20 MILS MINIMUM IN BOTH CASES.
8. BACKFLOW PREVENTER ASSEMBLY SHALL BE PROPERLY PREPARED AND PAINTED WITH "VISTA GREEN" INDUSTRIAL ENAMEL PAINT AFTER APPROVAL OF TESTING BY THE CITY.
9. FIRE DEPARTMENT CONNECTION AND CHECK VALVE SHALL BE PROPERLY PREPARED AND PAINTED WITH "YELLOW" INDUSTRIAL ENAMEL PAINT.
7. DOUBLE CHECK DETECTOR ASSEMBLY SHALL HAVE A FREEZE PROTECTION BLANKET PROVIDED AND INSTALLED BY THE CONTRACTOR AT THE CONTRACTOR'S EXPENSE. BLANKET DESIGN DRAWINGS CAN BE OBTAINED FROM THE CITY ENGINEER.
8. METER FOR THE DOUBLE CHECK DETECTOR ASSEMBLY SHALL BE SENSUS MODEL SR II.

CITY OF DIXON ENGINEERING STANDARD DETAIL	APPROVED: AUGUST 2014	DOUBLE CHECK DETECTOR ASSEMBLY INSTALLATION	W-20

CITY OF DIXON
ENGINEERING
STANDARD DETAIL

APPROVED: AUGUST 2014

RESIDENTIAL FIRE SPRINKLER SERVICE INSTALLATION

W-21

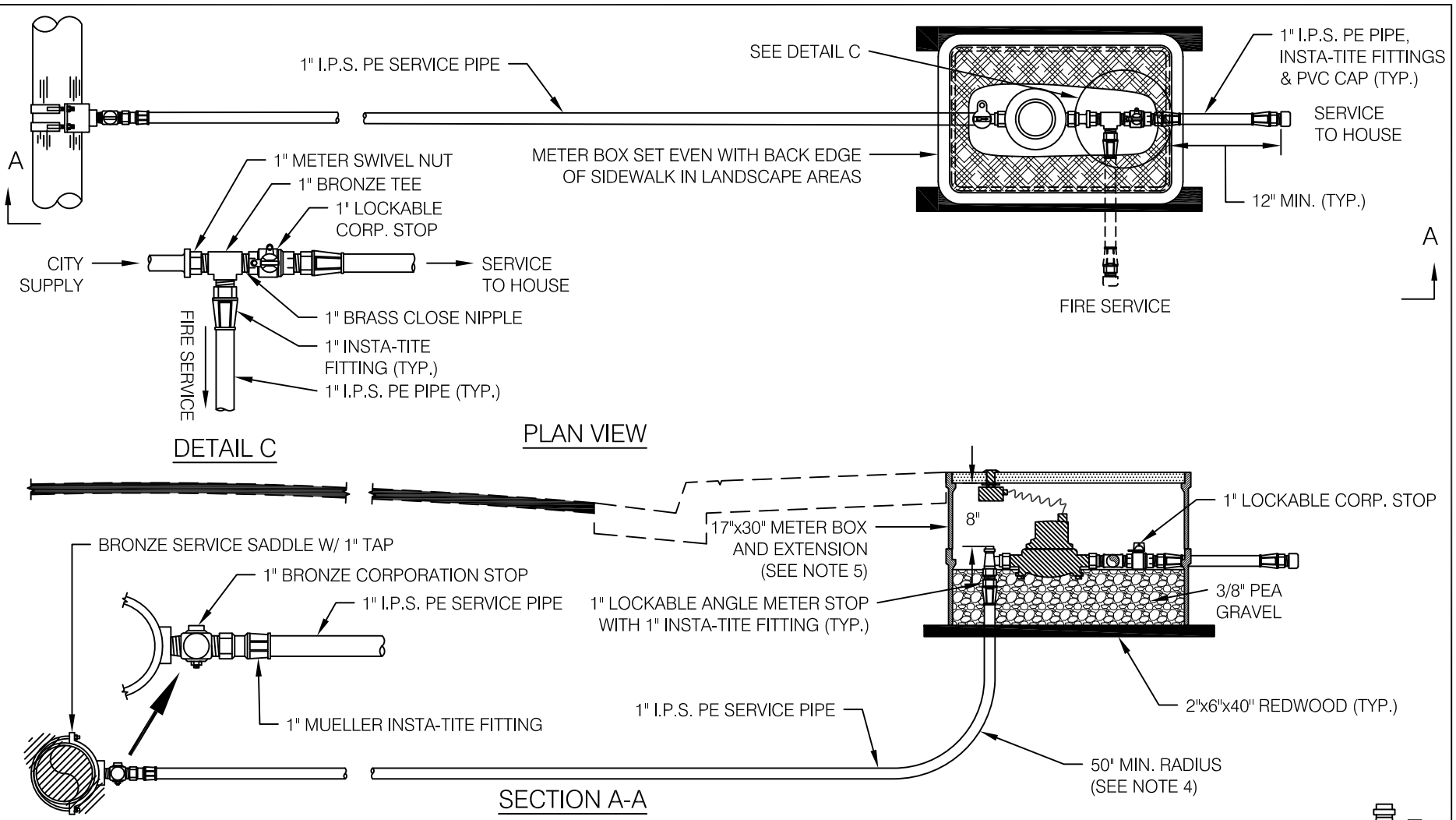

NOTES:

1. METER SHALL BE SENSUS MODEL SR II TOUCH READ WITH 520R PIT SET UNIT AND SHALL BE FURNISHED AND INSTALLED BY THE CITY AT THE CONTRACTOR'S EXPENSE.
2. IF THE METER IS NOT INSTALLED IMEDIATELY, THE CONTRACTOR SHALL FABRICATE AND INSTALL A JUMPER, LENGTH SHALL BE EQUAL TO THE LAY LENGTH OF THE METER TO BE INSTALLED, SEE DETAIL A.
3. 1" POLYETHYLENE PIPE SHALL BE IRON PIPE SIZE (I.P.S.) AND CONFORM TO ASTM D-2239, PE3408 WITH A PRESSURE RATING OF 200 PSI AND A SDR OF 7.
4. WHEN THE FIELD CONDITIONS WILL NOT ALLOW THE MINIMUM RADIUS, USE DETAIL B FOR THE REQUIRED INSTALLATION.
5. METER BOX AND EXTENSION SHALL BE LIGHTWEIGHT FIBERGLASS REINFORCED PLASTIC OR APPROVED EQUAL.

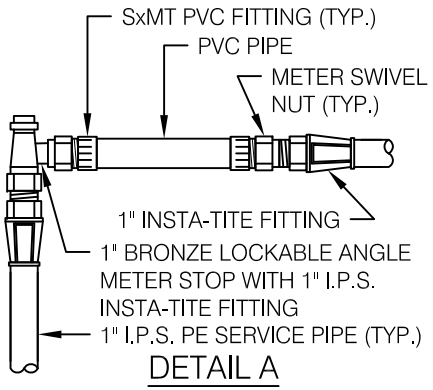

DETAIL A

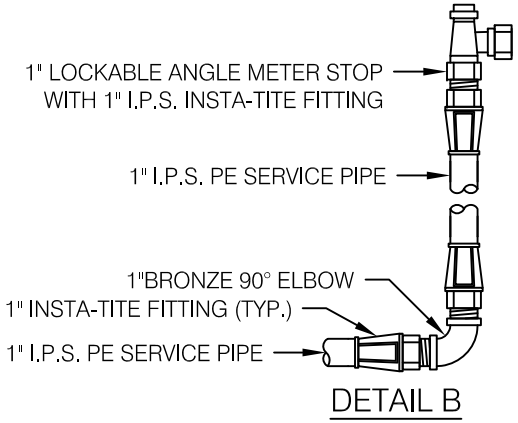

DETAIL B

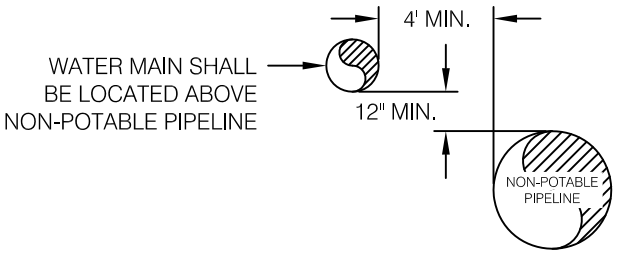

PARALLEL INSTALLATION

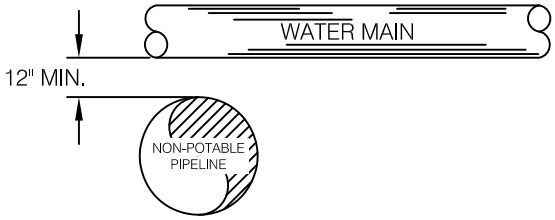

PERPENDICULAR CROSSING

BASIC SEPARATION REQUIREMENTS

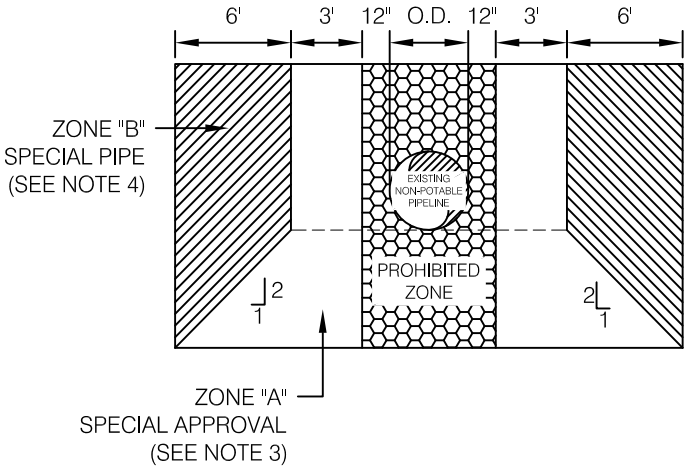

WATER MAIN PARALLEL INSTALLATION
(EXISTING NON-POTABLE PIPELINE)

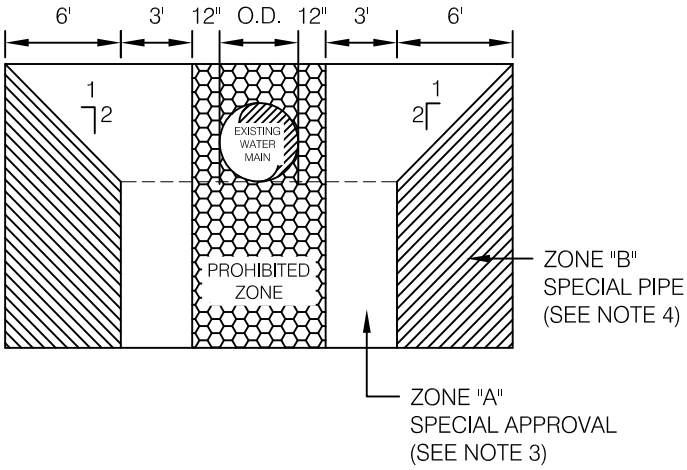

NON-POTABLE PARALLEL INSTALLATION
(EXISTING WATER MAIN)

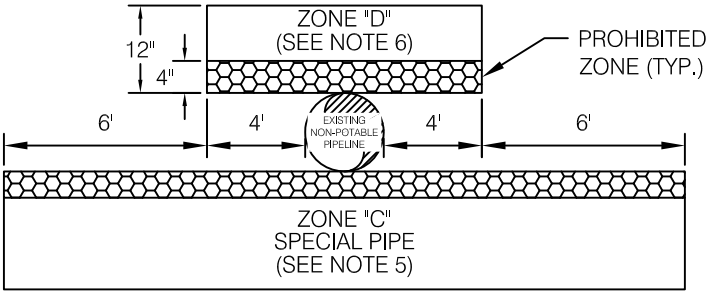

PERPENDICULAR CROSSING

SPECIAL SEPARATION REQUIREMENTS

DIMENSIONS ARE FROM THE OUTSIDE OF THE WATER MAIN TO THE OUTSIDE OF THE NON-POTABLE PIPELINE

NOTES:

1. THE CONTRACTOR SHALL FOLLOW THE CALIFORNIA WATERWORKS STANDARDS FOR THE SEPARATION REQUIREMENTS BETWEEN WATER MAINS AND NON-POTABLE PIPELINES GUIDELINES PREPARED BY THE STATE OF CALIFORNIA DEPARTMENT OF HEALTH SERVICES.
2. WHEN THE BASIC SEPARATION REQUIREMENTS CANNOT BE MET, THE CONTRACTOR SHALL INSTALL WATER MAINS ACCORDING TO SPECIAL INSTALLATION REQUIREMENTS.
3. NO WATER MAINS PARALLEL TO NON-POTABLE PIPELINES SHALL BE INSTALLED WITHIN ZONE "A" WITHOUT SPECIAL APPROVAL FROM THE DEPARTMENT OF HEALTH SERVICES.
4. WHEN LOCATED IN ZONE "B", THE WATER MAIN SHALL BE CLASS 200 PVC, DR 14 PER AWWA C900 OR EQUIVALENT.
5. WHEN LOCATED IN ZONE "C", THE WATER MAIN SHALL HAVE NO JOINTS WITHIN ZONE "C" AND BE CLASS 200 PVC, DR 14 PER AWWA C900 OR EQUIVALENT.
6. WHEN LOCATED IN ZONE "D", THE WATER MAIN SHALL HAVE NO JOINTS WITHIN FOUR FEET (4') FROM EITHER SIDE OF THE NON-POTABLE PIPELINE AND BE CLASS 200 PVC, DR 14 PER AWWA C900 OR EQUIVALENT.

CITY OF DIXON ENGINEERING STANDARD DETAIL	APPROVED: AUGUST 2014	WATER & NON-POTABLE PIPELINE SEPARATION DETAIL	W-22

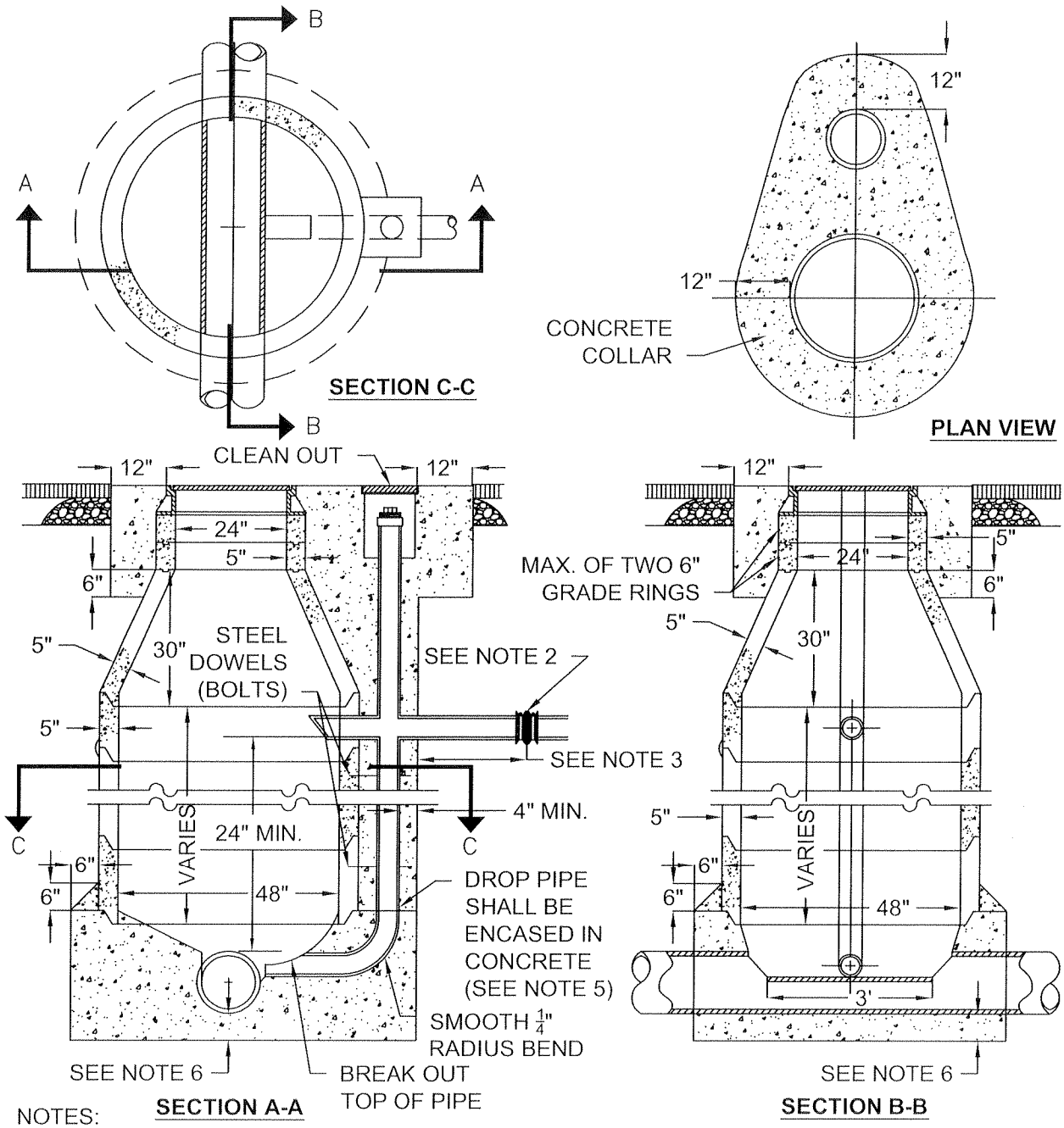

NOTES:

1. THIS INSTALLATION SHALL BE USED ON NEW MANHOLES ONLY WHERE THE DIFFERENCE IN ELEVATION BETWEEN THE TOP OF THE OUTLET PIPE AND THE INVERT OF THE FEEDER OR COLLECTOR SEWER EXCEEDS 24".
2. BAND COUPLER SHALL BE A MISSION SHIELDED TRANSITION COUPLER, MODEL NUMBER MR02-44 OR APPROVED EQUAL. BAND SHALL HAVE A MINIMUM OF 3 LOCKING BANDS STRAPS.
3. 12" MAX. FOR 8" TO 12" OR LARGER PIPE. 24" MAX. FOR PIPES LESS THAN 8".
4. THIS DETAIL SHALL ONLY BE USED FOR DROP PIPES 12" OR LESS. LARGER PIPES REQUIRE INDIVIDUAL DESIGN AND APPROVAL BY THE CITY ENGINEER.
5. PVC PIPE SHALL BE USED INSIDE THE CONCRETE CASTING.
6. MANHOLE BASES SHALL BE CAST IN PLACE PER DETAILS 4010, 4020 OR 4030 DEPENDEDNT UPON MAIN PIPE SIZE.

DIXON CALIFORNIA CITY OF DIXON ENGINEERING STANDARD DETAIL	REGISTERED PROFESSIONAL ENGINEER JAMES W. CUNNINGHAM No. C041085 EXP. 03/31/10 CIVIL STATE OF CALIFORNIA APPROVED: NOVEMBER 2009	OUTSIDE SANITARY SEWER DROP MANHOLE	6000

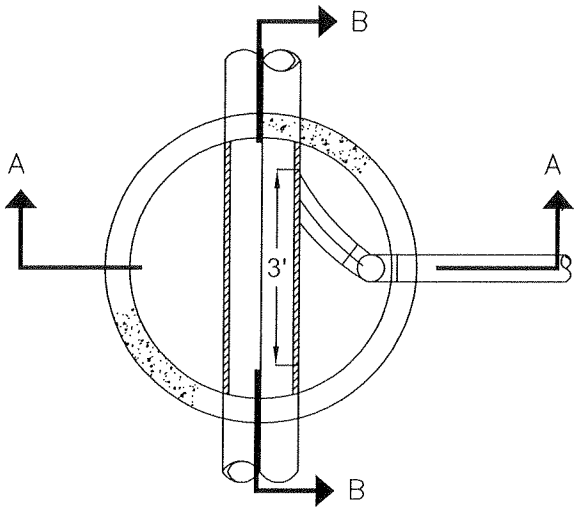

PLAN VIEW

NOTES:

1. THIS INSTALLATION SHALL BE USED ON EXISTING MANHOLES ONLY WHERE THE DIFFERENCE IN ELEVATION BETWEEN THE TOP OF THE OUTLET PIPE AND THE INVERT OF THE FEEDER OR COLLECTOR SEWER EXCEEDS 24".
2. BAND COUPLER SHALL BE A MISSION SHIELDED TRANSITION COUPLER, MODEL NUMBER MR02-44 OR APPROVED EQUAL. BAND SHALL HAVE A MINIMUM OF 3 LOCKING BAND STRAPS.

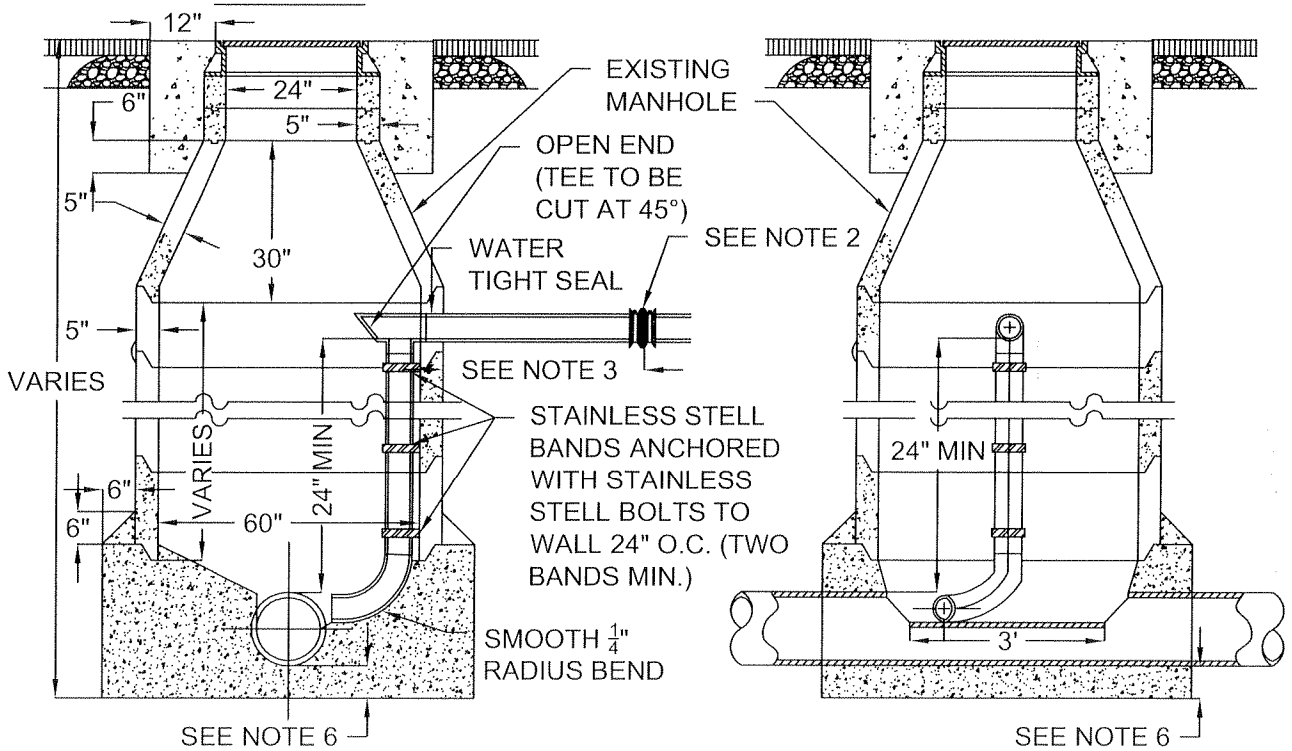

SECTION A-A

SECTION B-B

NOTES (CONTINUED):

3. 12" MAX FOR 8" TO 12" OR LARGER PIPE. 24" MAX. FOR PIPES LESS THAN 8".
4. THIS DETAIL SHALL ONLY BE USED FOR DROP PIPES 12" OR LESS. LARGER PIPES REQUIRE INDIVIDUAL DESIGN AND APPROVAL BY THE CITY ENGINEER.
5. PVC OR ABS PIPE SHALL BE USED INSIDE MANHOLE.
6. MANHOLE BASES SHALL BE CAST IN PLACE PER DETAILS 4010, 4020 OR 4030 DEPENDEDNT UPON MAIN PIPE SIZE.
7. CAST IN PLACE MANHOLE BASES SHALL HAVE FULLY FORMED INTERIOR AND EXTERIOR WALLS. POURING THE WALLS OF THE BASE AGAINST THE WALL OF THE EXCAVATION SHALL NOT BE PERMITTED.

6010	INSIDE SANITARY SEWER DROP MANHOLE	REGISTERED PROFESSIONAL ENGINEER JOHN W. CUNNINGHAM No. C041985 EXP. 03/31/10 CIVIL STATE OF CALIFORNIA APPROVED: NOVEMBER 2009	CITY OF DIXON ENGINEERING STANDARD DETAIL DIXON CALIFORNIA

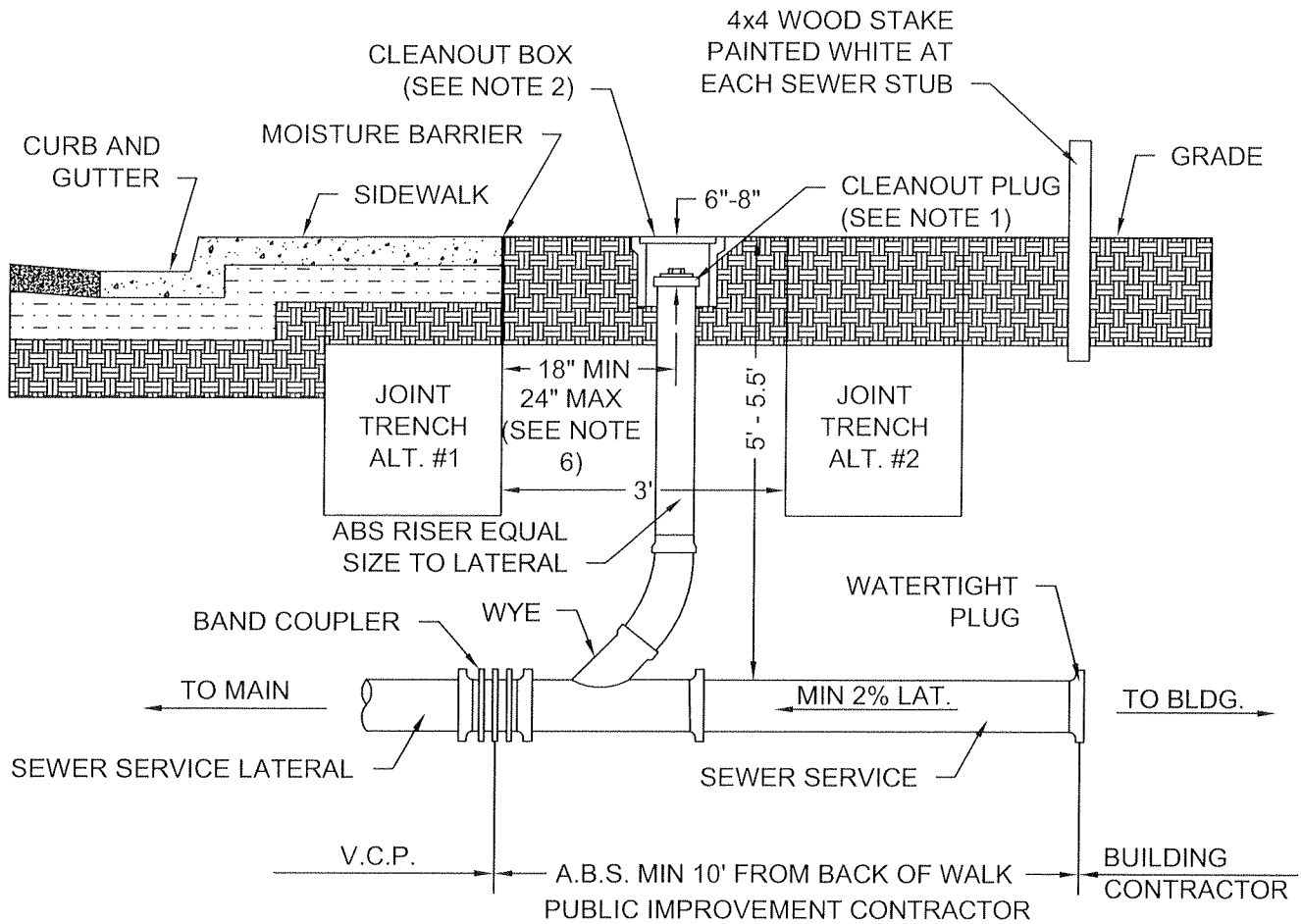

NOTE:

1. CLEANOUT PLUG TO CONSIST OF AN ABS THREADED CLEANOUT ADAPTER AND ABS CLEANOUT PLUG.
2. CLEANOUT BOX:
   - 2.1. IN LANDSCAPED AREAS USE CHRISTY F8 BOX WITH D120 CONCRETE LID MARKED "SEWER".
   - 2.2. IN CONCRETE DRIVEWAY OR PAVED AREAS, USE CHRISTY G5 TRAFFIC BOX WITH C275 CAST IRON LID MARKED "SEWER".
   - 2.3. ALTERNATES TO BE USED UPON CITY ENGINEER APPROVAL ONLY.
3. UNDERGROUND CONTRACTOR TO LAY ABS LATERAL A MINIMUM OF 10 FEET BEYOND BACK OF WALK, PLUG AND INSTALL WOOD MARKER STAKE PAINTED WHITE.
4. BUILDING CONTRACTOR TO CONNECT TO STUB FOR SERVICE TO BUILDING.
5. LOCATION OF WATER LINES AND PUBLIC UTILITY LINES SHALL ACCOMMODATE GRAVITY FLOW OF SEWER SERVICES.
6. IN AREAS WHERE NO SIDEWALK EXISTS, THE CLEANOUT SHALL BE LOCATED WITHIN 18 INCHES OF THE BACK OF CURB AND THE BOX SET LEVEL WITH FINISH GRADE.
7. ALL PIPE AND FITTINGS FROM BAND COUPLER TO BUILDING SHALL BE ABS.
8. SERVICE LATERAL FROM THE MAIN TO THE BAND COUPLER SHALL BE V.C.P.

DIXON CALIFORNIA — CITY OF DIXON ENGINEERING STANDARD DETAIL	REGISTERED PROFESSIONAL ENGINEER — CHRISTOPHER W. CUNNINGHAM — No. C041985 — EXP. 03/31/10 — CIVIL — STATE OF CALIFORNIA APPROVED: NOVEMBER 2009	SEWER LATERAL CLEANOUT	6020

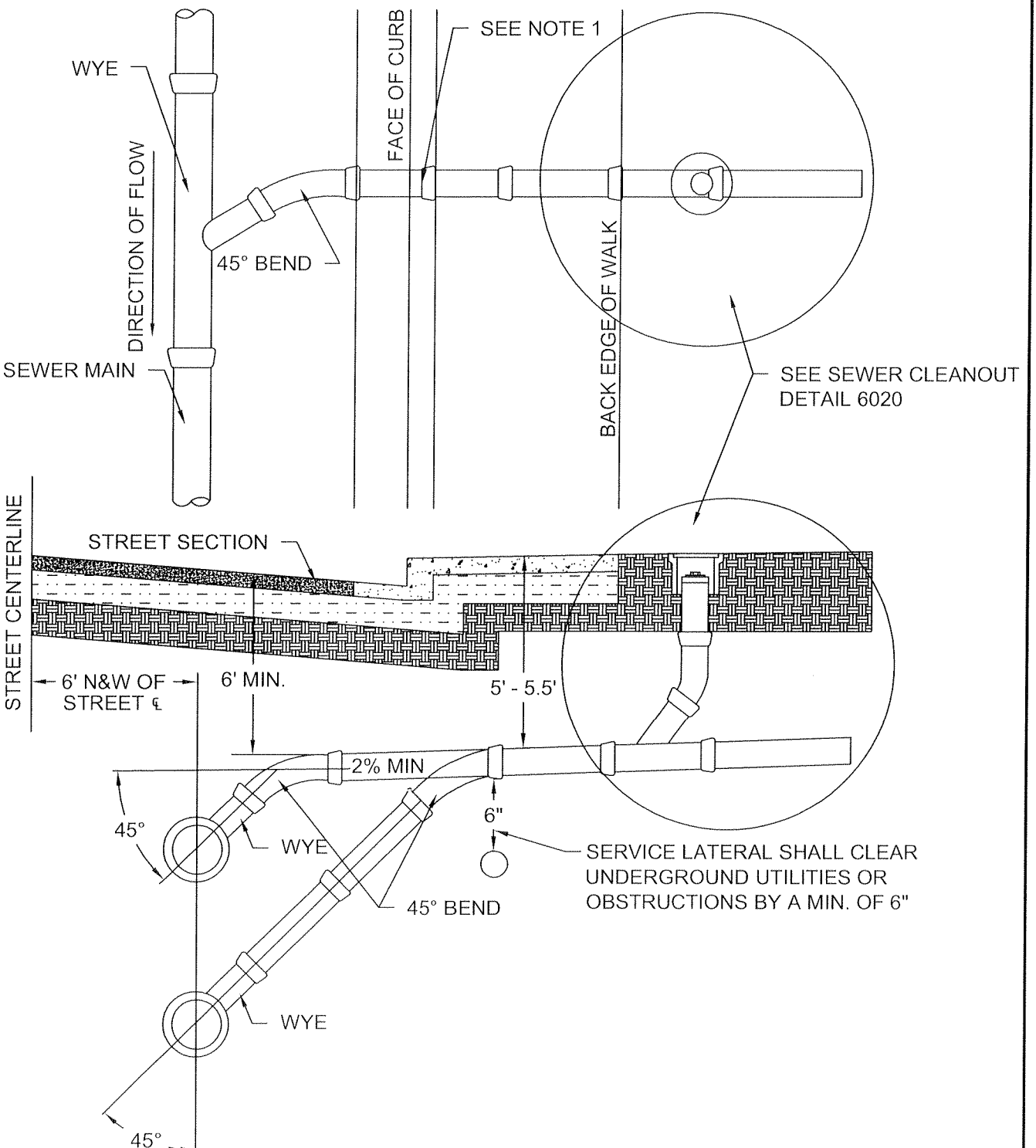

NOTES:

1. STAMP "S" IN 2.5" LETTERS ON TOP OF CURB AT SERVICE LOCATIONS.

6030	SEWER SERVICE LATERAL	REGISTERED PROFESSIONAL ENGINEER JOSE W. CUNNINGHAM No. C041985 EXP. 03/31/10 CIVIL STATE OF CALIFORNIA APPROVED: NOVEMBER 2009	CITY OF DIXON ENGINEERING STANDARD DETAIL

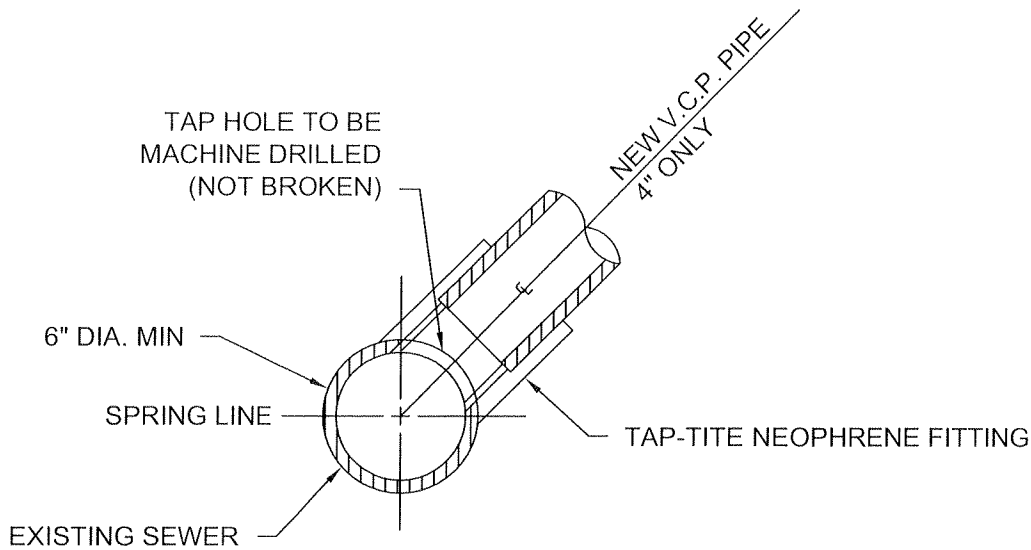

TAP-TITE

NOTES:

1. USE OF PREFABRICATED WYES AND TEES MUST BE APPROVED BY THE CITY ENGINEER.
2. TAPPING METHOD SHALL BE "TAP-TITE" OR EQUAL APPROVED BY THE CITY ENGINEER.
3. INVERT OF TAP SHALL BE ABOVE SPRING LINE OF MAIN.

DIXON CALIFORNIA CITY OF DIXON ENGINEERING STANDARD DETAIL	REGISTERED PROFESSIONAL ENGINEER JOHN W. CUNNINGHAM No. C041083 EXP. 03/31/10 CIVIL STATE OF CALIFORNIA APPROVED: NOVEMBER 2009	TAP-TITE SEWER FITTINGS	6040

This Page Intentionally
Left Blank

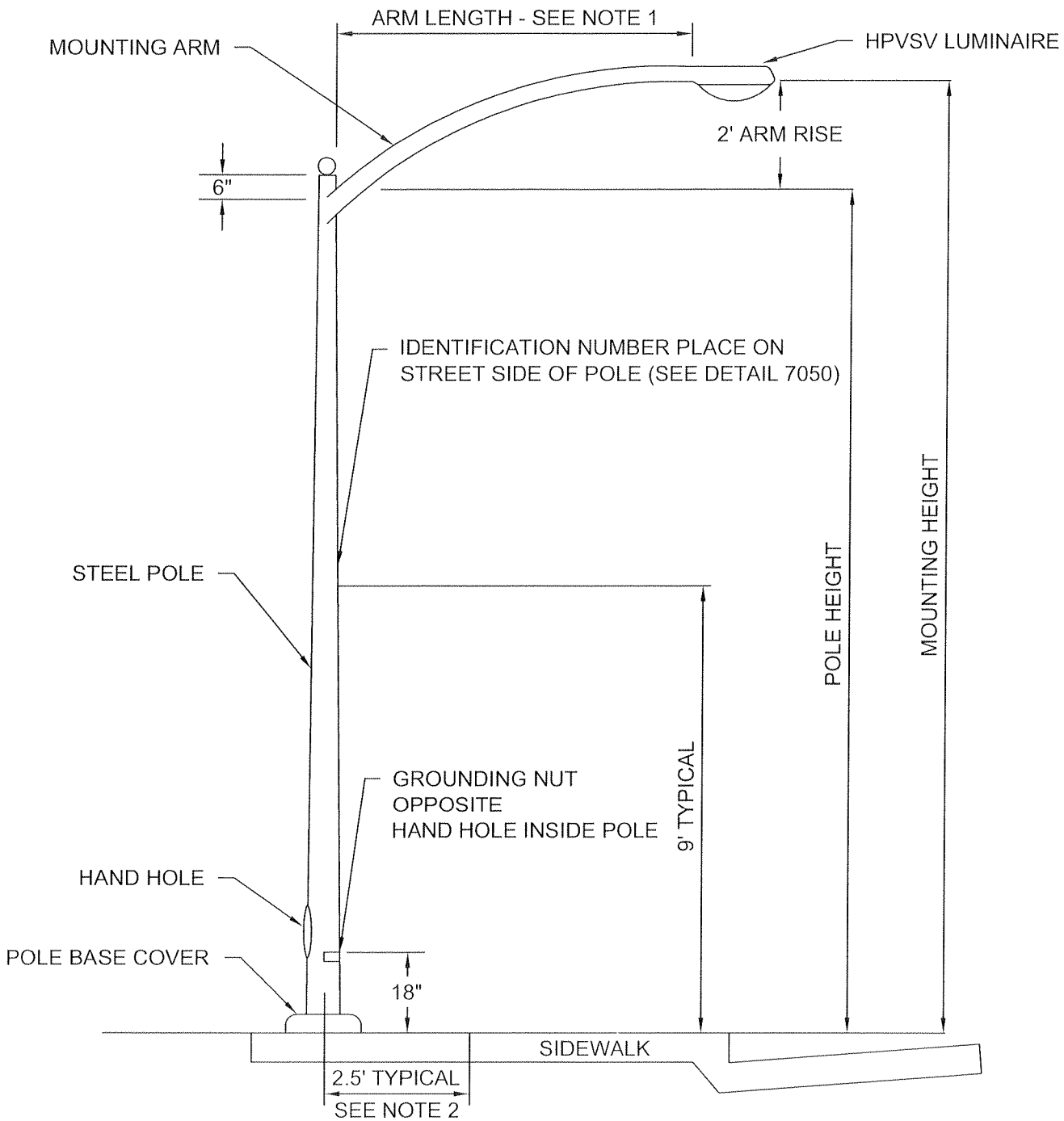

TYPE	LUMINAIRE WATTAGE	NOM. MOUNTING HEIGHT	APPLICATION
A / D	70	28'	RESIDENTIAL / INDUSTRIAL
B	100	28'	COLLECTOR
C	200	28'	ARTERIAL

NOTE:

1. ARM LENGTH IS TO BE SELECTED SO THAT LUMINAIRE IS MOUNTED DIRECTLY ABOVE THE FACE OF CURB.
2. WITH CURB AND GUTTER ONLY, USE 3' FROM FACE OF CURB.

DIXON CALIFORNIA CITY OF DIXON ENGINEERING STANDARD DETAIL	REGISTERED PROFESSIONAL ENGINEER JAMES W. CUNNINGHAM No. C041985 EXP. 03/31/10 CIVIL STATE OF CALIFORNIA APPROVED: NOVEMBER 2009	STREET LIGHT POLE INSTALLATION	7000

NOTE:

1. **ADDITIONAL PULL BOXES SHALL BE LOCATED WHERE SPLICES ARE LOCATED BETWEEN LIGHT STANDARDS AT ALL ANGLE POINTS AND FOR CONDUIT RUNS OVER 300 FEET.**

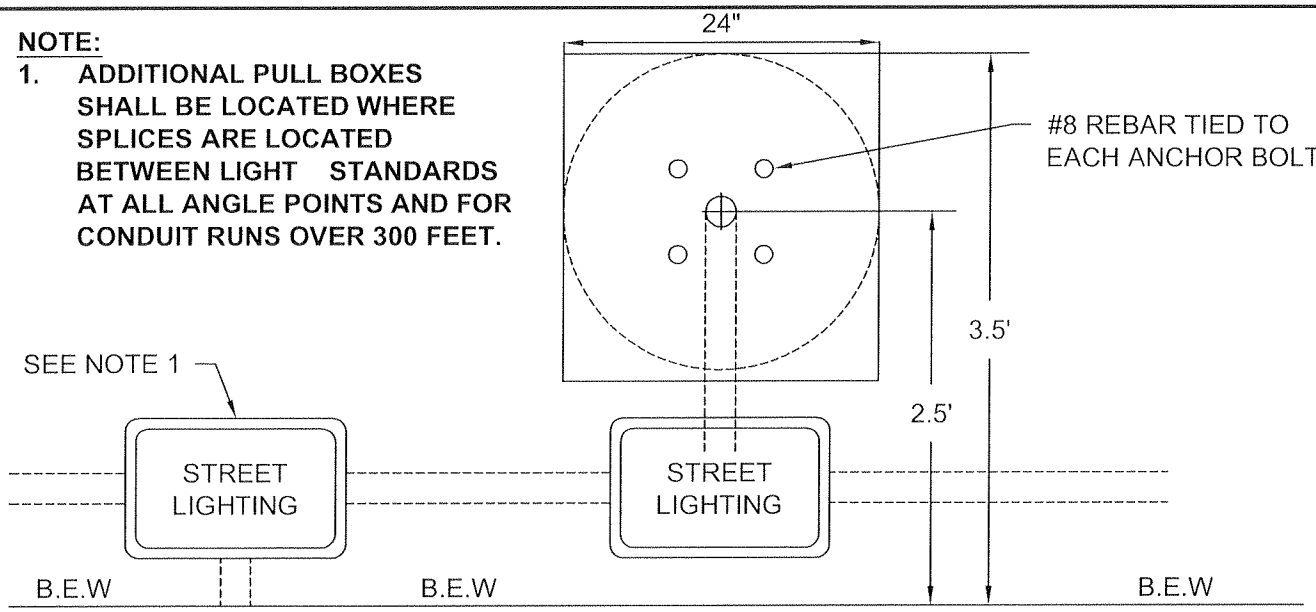

PLAN VIEW

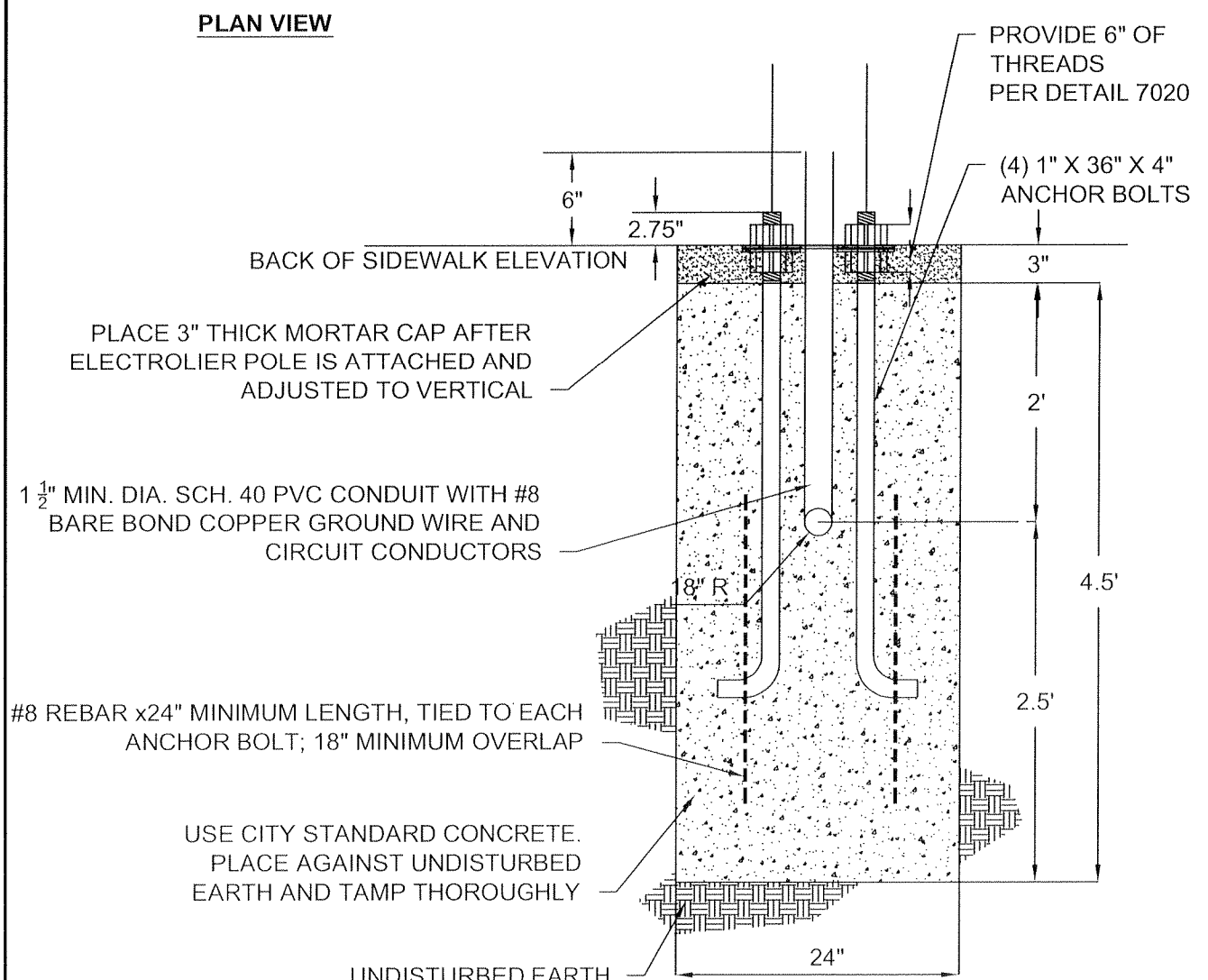

7010	STREETLIGHT FOUNDATION CAST-IN-PLACE	REGISTERED PROFESSIONAL ENGINEER W. CUNNINGHAM No. C041983 EXP. 03/31/10 CIVIL STATE OF CALIFORNIA APPROVED: NOVEMBER 2009	CITY OF DIXON ENGINEERING STANDARD DETAIL DIXON CALIFORNIA

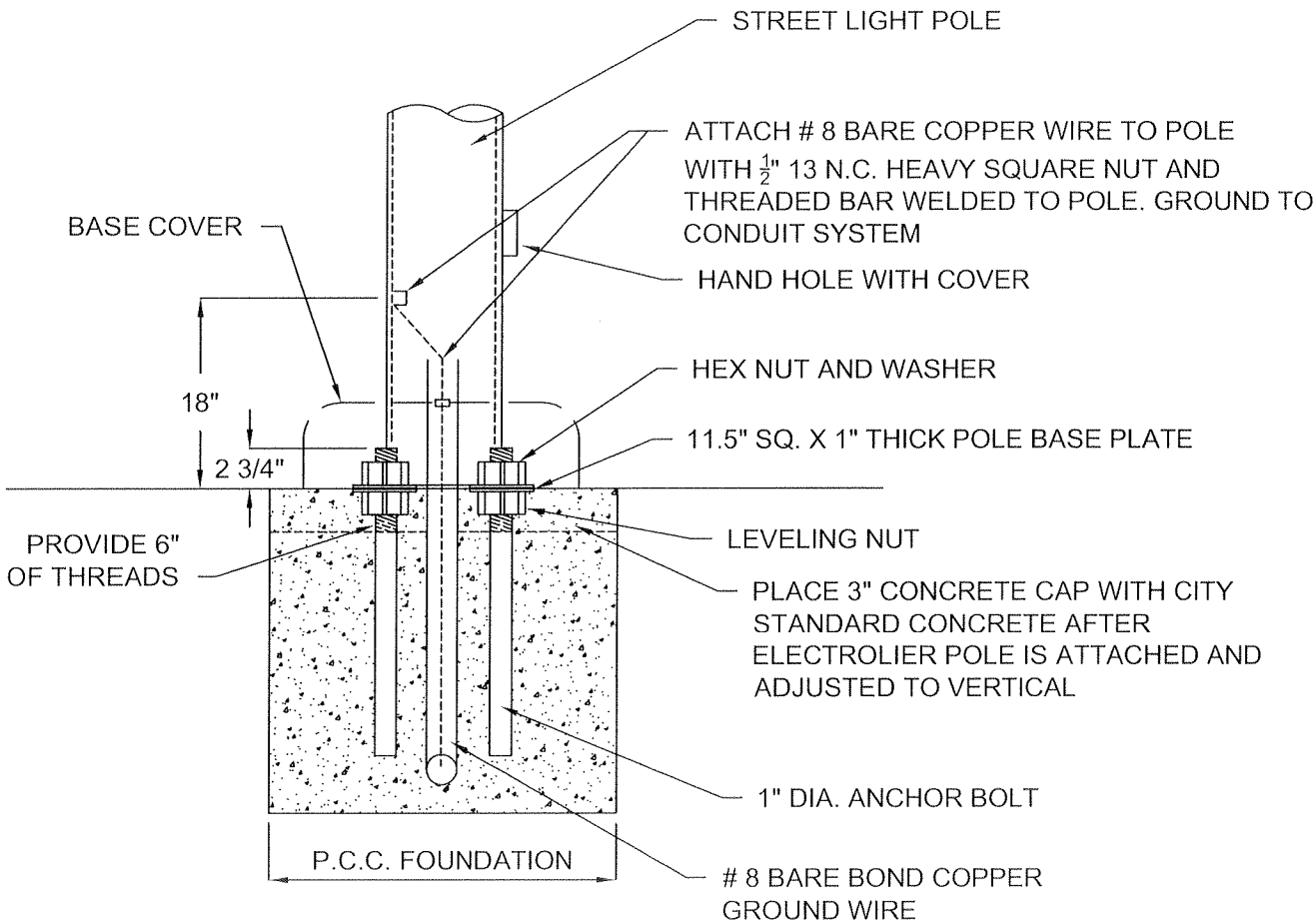

NOTE:

1. USE CITY STANDARD CONCRETE PLACED AGAINST UNDISTURBED EARTH AND TAMP THOROUGHLY.

DIXON CALIFORNIA — CITY OF DIXON ENGINEERING STANDARD DETAIL	REGISTERED PROFESSIONAL ENGINEER JACQUE W. CUNNINGHAM No. C041983 EXP. 03/31/10 CIVIL STATE OF CALIFORNIA APPROVED: NOVEMBER 2009	STREET LIGHT POLE TO BASE ATTACHMENT	7020

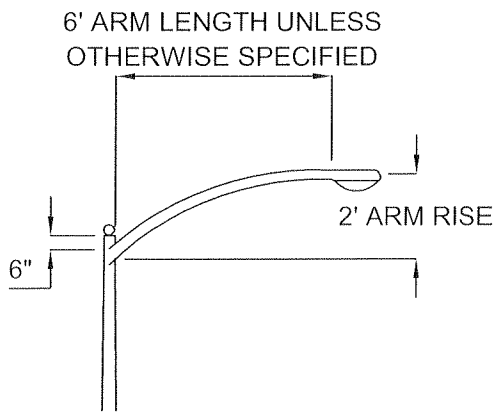

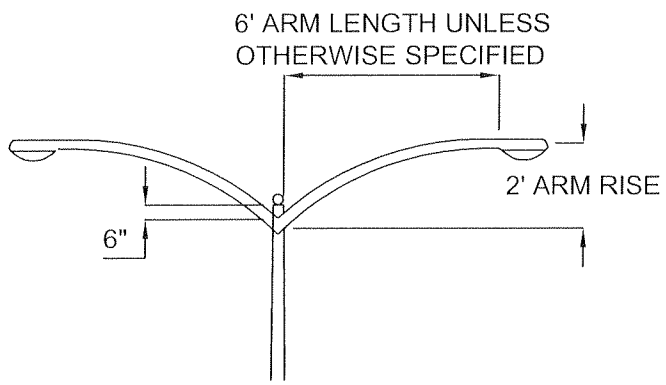

SINGLE ARM POLE

MOUNTING HEIGHT	ARM LENGTH	RISE	GAUGE
28'-0"	6'-0"	2'-0"	10
28'-0"	8'-0"	2'-0"	10

DOUBLE ARM POLE

MOUNTING HEIGHT	ARM LENGTH	RISE	GAUGE
32'-6"	6'-0"	2'-0"	11
32'-6"	8'-0"	2'-0"	11

NOTES:

1. POLES SHALL BE IN ACCORDANCE WITH APPLICABLE REQUIREMENTS OF EE1-NEMA STANDARDS FOR STREET LIGHTING POLES, EET PUBLICATION NO. TDJ 135.
2. ALL STEEL POLES TO HAVE $\frac{1}{2}$" SQUARE GROUND OR NUT HOLDER IN THE POLE, DIRECTLY OPPOSITE THE HANDHOLE.
3. ALL STEEL POLES TO BE FURNISHED GALVANIZED . GALVANIZED STEEL POLES AND ANCHOR BOLTS TO BE HOT DIP GALVANIZED PER LATEST REVISIONS OF ASTM SPECIFICATION A153.
4. ALL STEEL PLATES TO BE FURNISHED WITH HANDHOLE AND HANDHOLE COVERS.
5. POLES TO BE FURNISHED WITH POLE BASE COVERS.

7030	STREET LIGHT POLE SPECIFICATIONS	REGISTERED PROFESSIONAL ENGINEER J. W. CUNNINGHAM No. C041985 EXP. 03/31/10 CIVIL STATE OF CALIFORNIA APPROVED: NOVEMBER 2009	CITY OF DIXON ENGINEERING STANDARD DETAIL

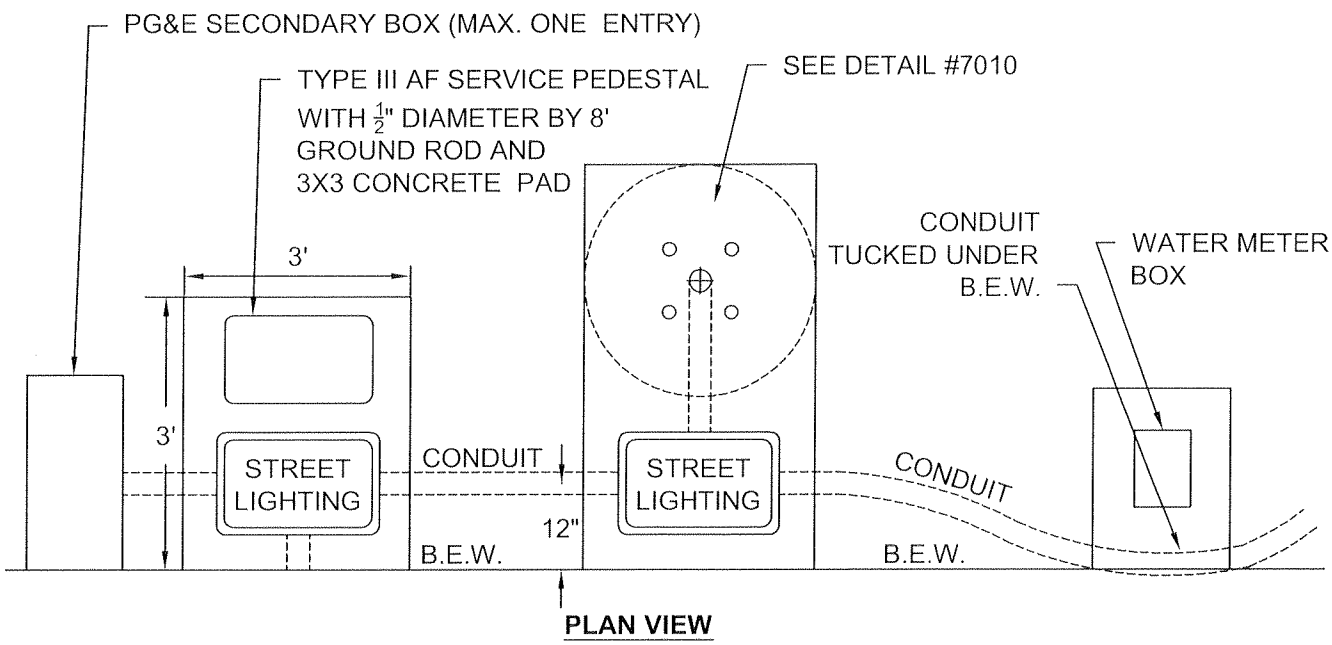

PLAN VIEW

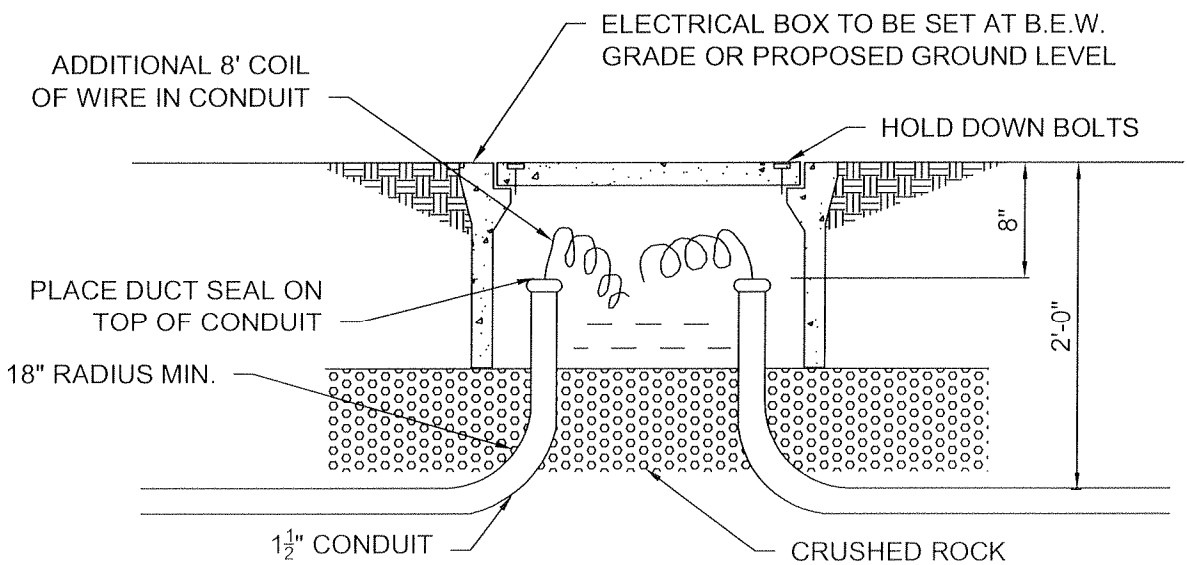

NOTE:

1. ALL CONDUIT SHALL BE MIN. $1\frac{1}{2}$" SCHEDULE 40 PVC.
2. PULL BOXES SHOULD BE LOCATED AT EACH POLE, WHERE SPLICES ARE TO BE MADE BETWEEN LIGHT STANDARDS, WHERE A SERVICE FROM A PG&E SERVICE POINT MUST BE SPLIT, AND FOR ALL RUNS OVER 300 FEET.
3. BUSHINGS SHALL BE INSTALLED AT ALL CONDUITS ENDS.
4. PULL BOX SHALL BE PRECAST REINFORCED CONCRETE, # 3 $\frac{1}{2}$ STATE PULL BOX WITH HOLD DOWN BOLTS AND MARKED "STREET LIGHTING".
5. SERVICE PEDISTAL SHALL BE CALTRANS STANDARD TYPE III AF WITH SEPERATE BREAKERS FOR EACH CIRCUIT.
6. AN ADDITIONAL 8' OF ELECTRICAL WIRE SHALL BE COILED IN THE BOX.
7. TAPE AND SCOTCH GUARD SHALL BE PLACED AROUND EXPOSED WIRES.

DIXON CALIFORNIA — CITY OF DIXON ENGINEERING STANDARD DETAIL	REGISTERED PROFESSIONAL ENGINEER — STEVE W. CUNNINGHAM — No. C061985 — EXP. 03/31/10 — CIVIL — STATE OF CALIFORNIA APPROVED: NOVEMBER 2009	STREET LIGHT BOX & CONDUIT INSTALLATION	7040

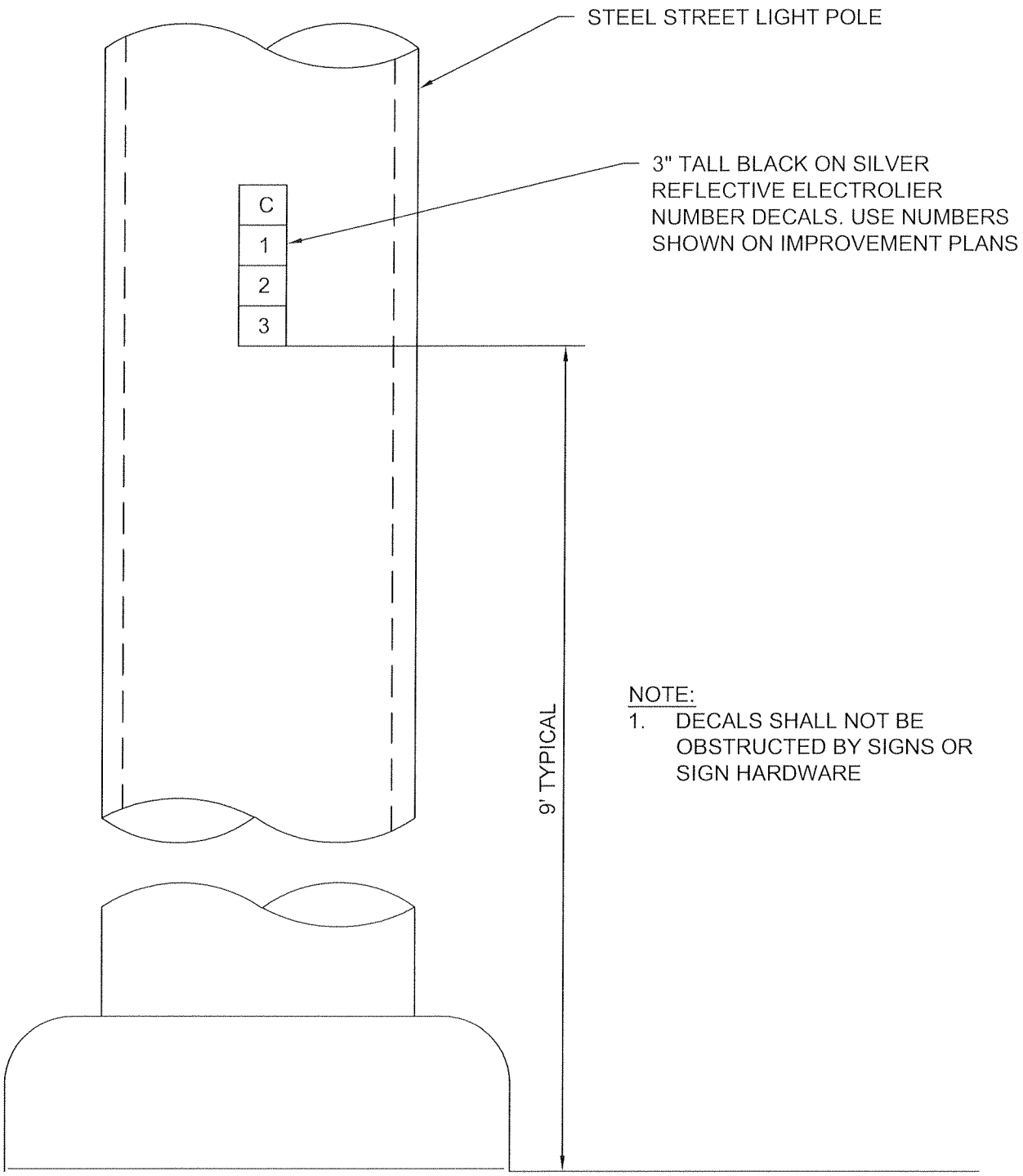

NOTE:

1. DECALS SHALL NOT BE OBSTRUCTED BY SIGNS OR SIGN HARDWARE

7050	STANDARD STREET LIGHT NUMBERING	REGISTERED PROFESSIONAL ENGINEER JEFFREY W. CUNNINGHAM No. C041985 EXP. 03/31/10 CIVIL STATE OF CALIFORNIA APPROVED: NOVEMBER 2009	CITY OF DIXON ENGINEERING STANDARD DETAIL

POLE CATALOG NUMBER: SER-4.3
POLE HEIGHT ABOVE GROUND: 14'-0"
EMBEDDED DEPTH: 4'-0"
BUTT DIAMETER: 6 $\frac{3}{8}$"
OVERALL LENGTH: 18'-0"
ULTIMATE G.L. MOMENT: 7,080 FT. LBS.
WEIGHT: 330 LBS.

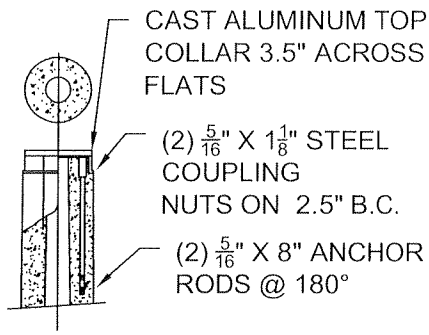

TOP MOUNT DETAIL

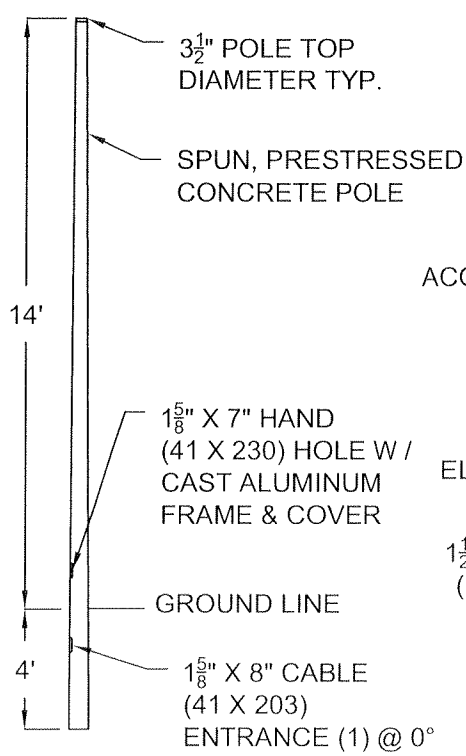

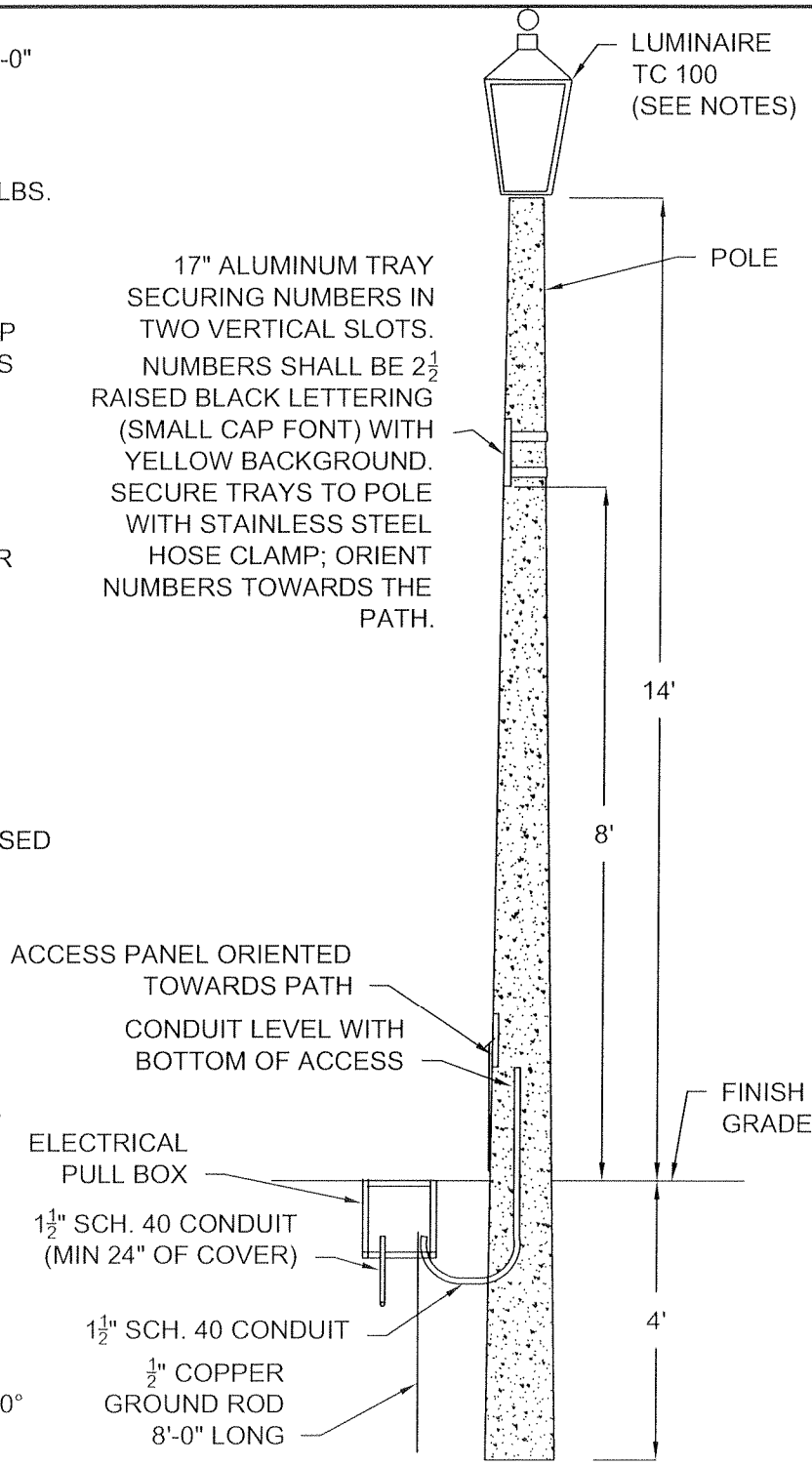

NOTES:

1. FIXTURE TO BE INSTALLED SUCH THAT LIGHT PATTERN (TYPE III) IS DISTRIBUTED LONGITUDINALLY ALONG PATHWAY EXCEPT THAT LIGHTS SHOWN IN TRIANGULAR WALK INTERSECTIONS TO HAVE FULL CIRCLE PATTERNS. HOUSE SIDE OF SHIELDS SHALL BE INSTALLED WHERE REQUIRED BY PLANS AS DIRECTED BY CITY ENGINEER.
2. POLE SHALL HAVE A TERRAZZO/EXPOSED FINISH, WITH ACRYLIC COATING, BROWN COLOR #513, WITH A 2$\frac{7}{8}$" TENON ARM.

DIXON CALIFORNIA CITY OF DIXON ENGINEERING STANDARD DETAIL	REGISTERED PROFESSIONAL ENGINEER CLAUDE W. CUNNINGHAM No. C041085 EXP. 03/31/10 CIVIL STATE OF CALIFORNIA APPROVED: NOVEMBER 2009	EXPOSED AGGREGATE POLE TOP PATH LIGHT	7060

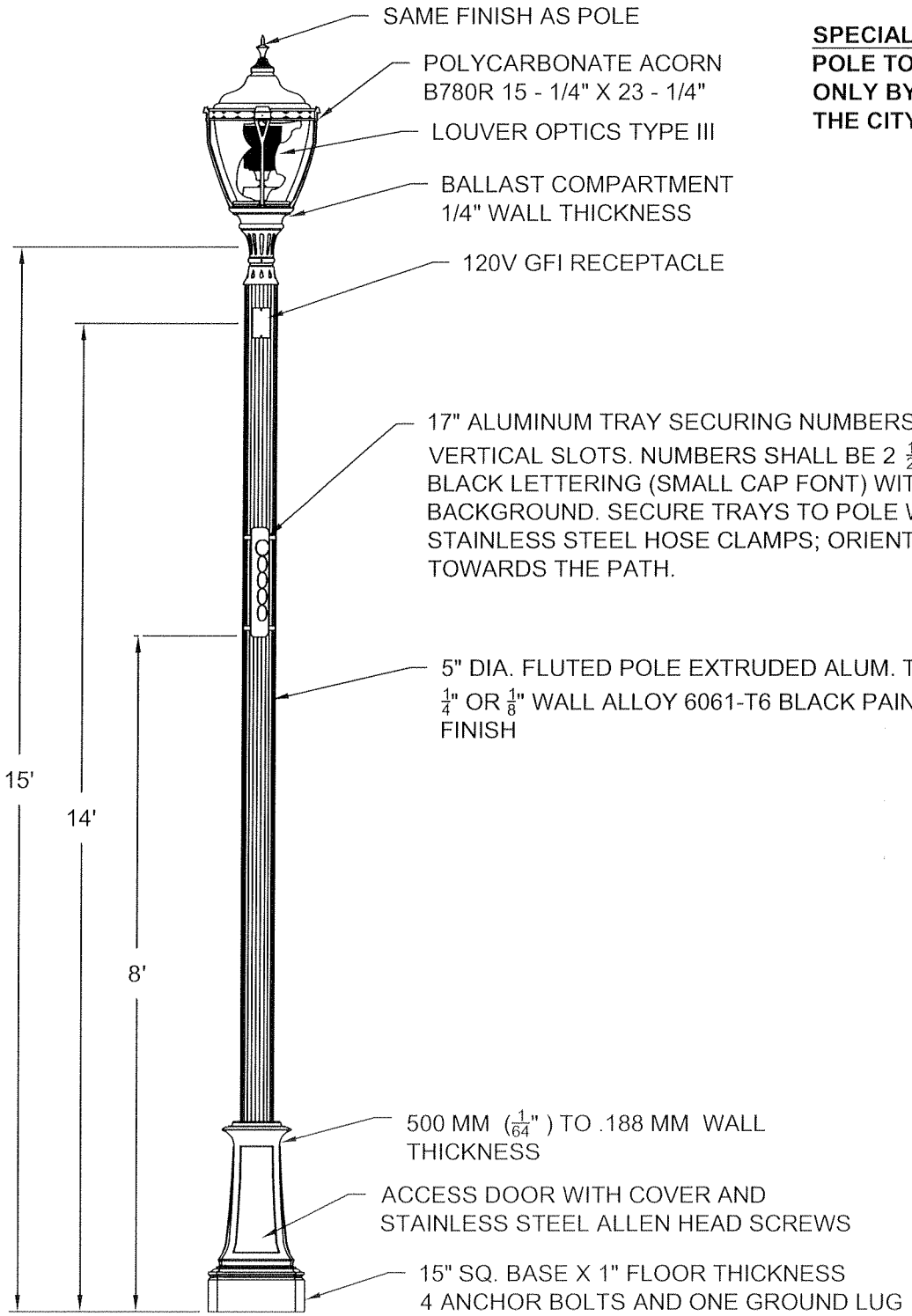

SPECIAL NOTE:
POLE TOP TO BE USED ONLY BY APPROVAL OF THE CITY ENGINEER.

NOTES:

1. HOUSE SIDE SHIELD SHALL BE INSTALLED AS SPECIFIED ON THE PLANS AND AS DIRECTED BY THE CITY ENGINEER.
2. POLE SHALL BE WELDED FOR SINGLE UNIT CONSTRUCTION.

7070	FLUTED POLE TOP PATH LIGHT	REGISTERED PROFESSIONAL ENGINEER CHARLES W. CUNNINGHAM No. C041985 EXP. 03/31/10 CIVIL STATE OF CALIFORNIA APPROVED: NOVEMBER 2009	CITY OF DIXON ENGINEERING STANDARD DETAIL DIXON CALIFORNIA

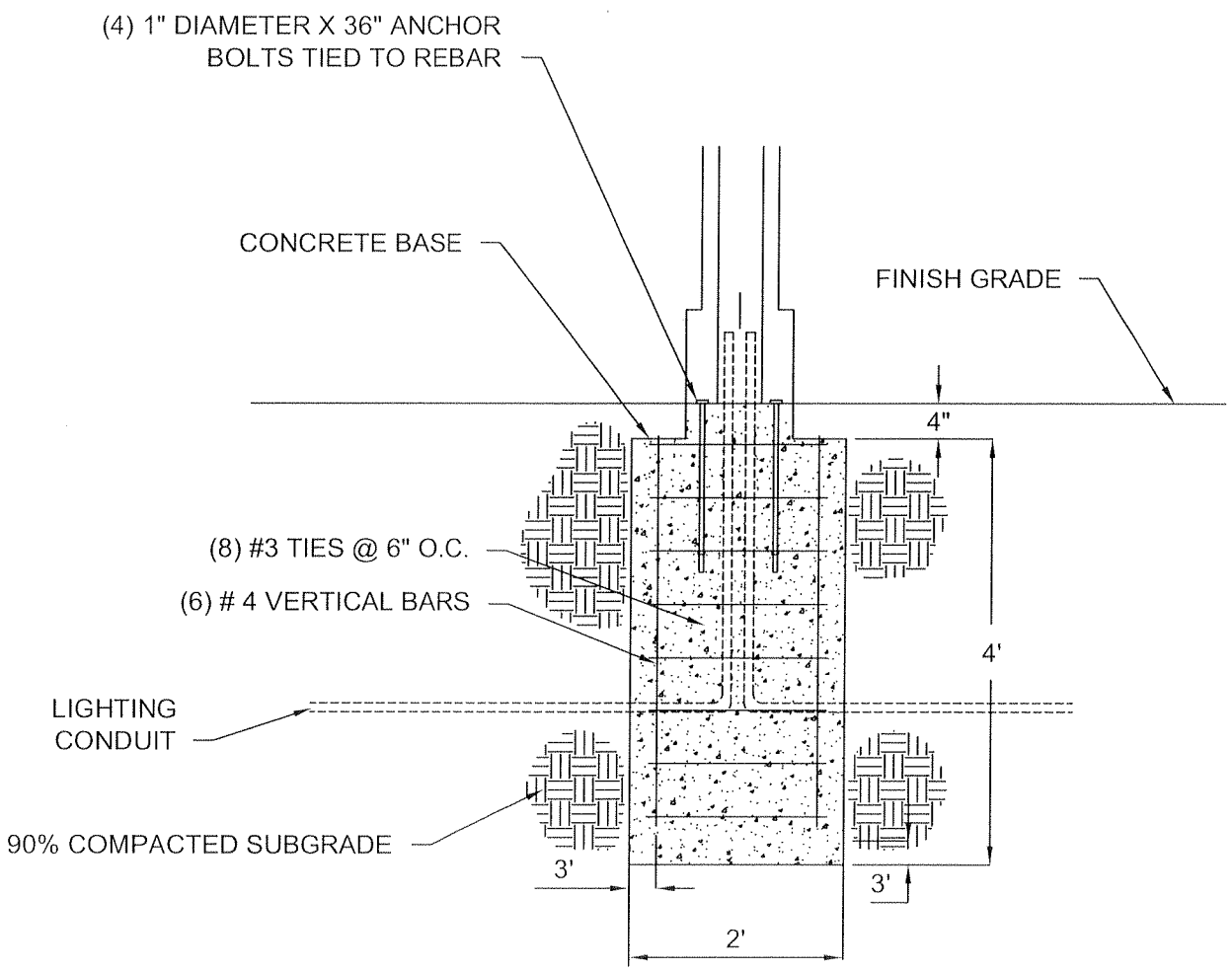

NOTE:

1. USE CITY STANDARD CONCRETE, PLACE AGAINST UNDISTURBED EARTH AND TAMP THOROUGHLY.

CITY OF DIXON ENGINEERING STANDARD DETAIL	REGISTERED PROFESSIONAL ENGINEER GRACE W. CUNNINGHAM No. C041985 EXP. 03/31/10 CIVIL STATE OF CALIFORNIA APPROVED: NOVEMBER 2009	FLUTED POLE TOP PATH LIGHT BASE DETAIL	7080

This Page Intentionally
Left Blank

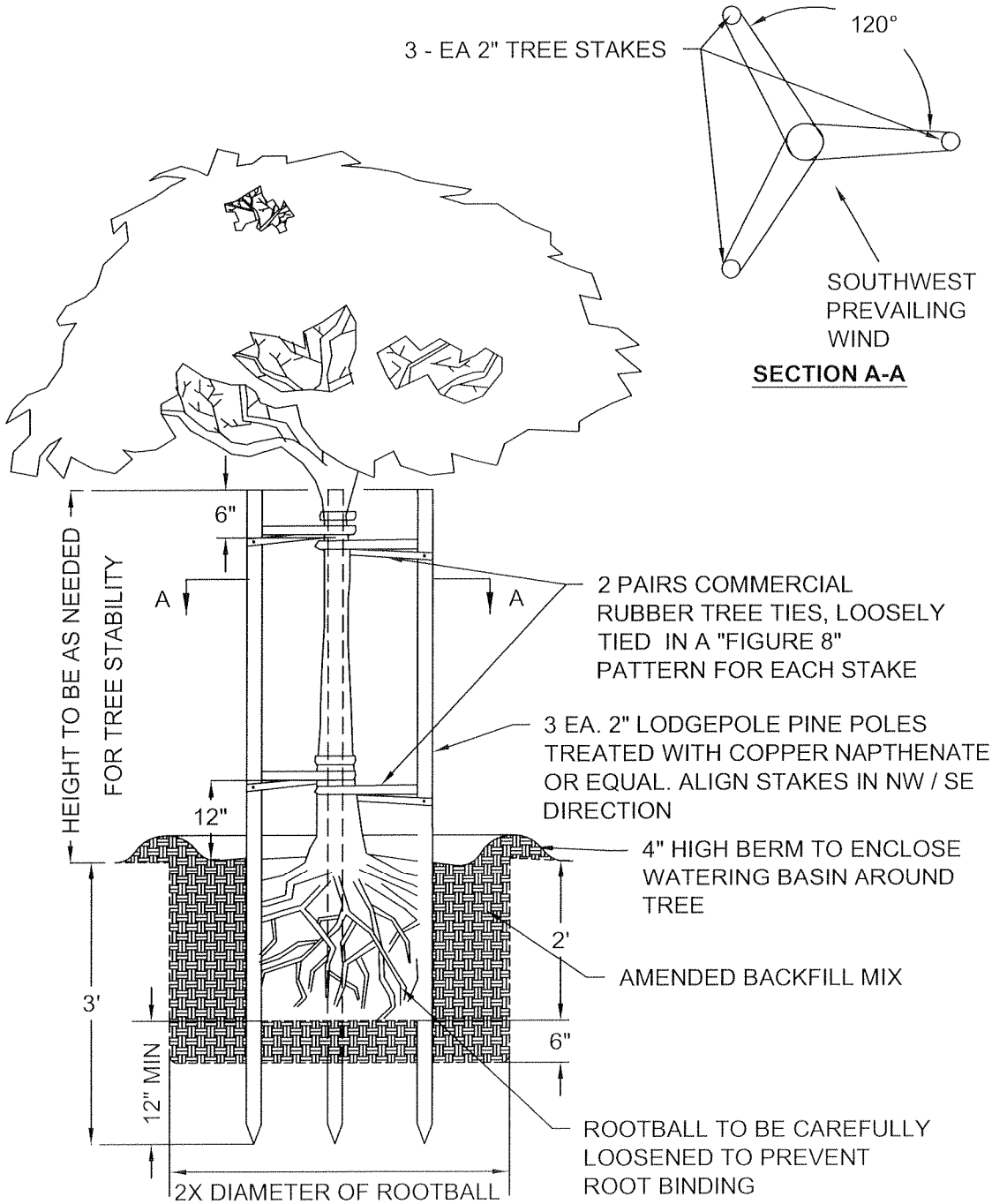

NOTES:

1. ROOT CONTROL PLANTER BOXES SHALL BE REQUIRED WHERE TREE IS 10 FEET OR LESS FROM EXISTING OR FUTURE SIDEWALK OR CURB. EWING STANDARD PLANTER, UNIVERSAL PLANTER OR CENTURY RC 24 OR EQUAL MAY BE USED. LENGTH OF BARRIER = 6' CENTERED ON TREE.
2. TREES SHALL BE PROVIDED WITH AUTOMATIC IRRIGATION SYSTEMS (INDIVIDUAL BUBBLERS WITH WATER BASIN).

DIXON CALIFORNIA — CITY OF DIXON ENGINEERING STANDARD DETAIL	REGISTERED PROFESSIONAL ENGINEER — JOHN W. CUNNINGHAM — No. C041985 — EXP. 03/31/10 — CIVIL — STATE OF CALIFORNIA APPROVED: NOVEMBER 2009	TREE PLANTING	8000

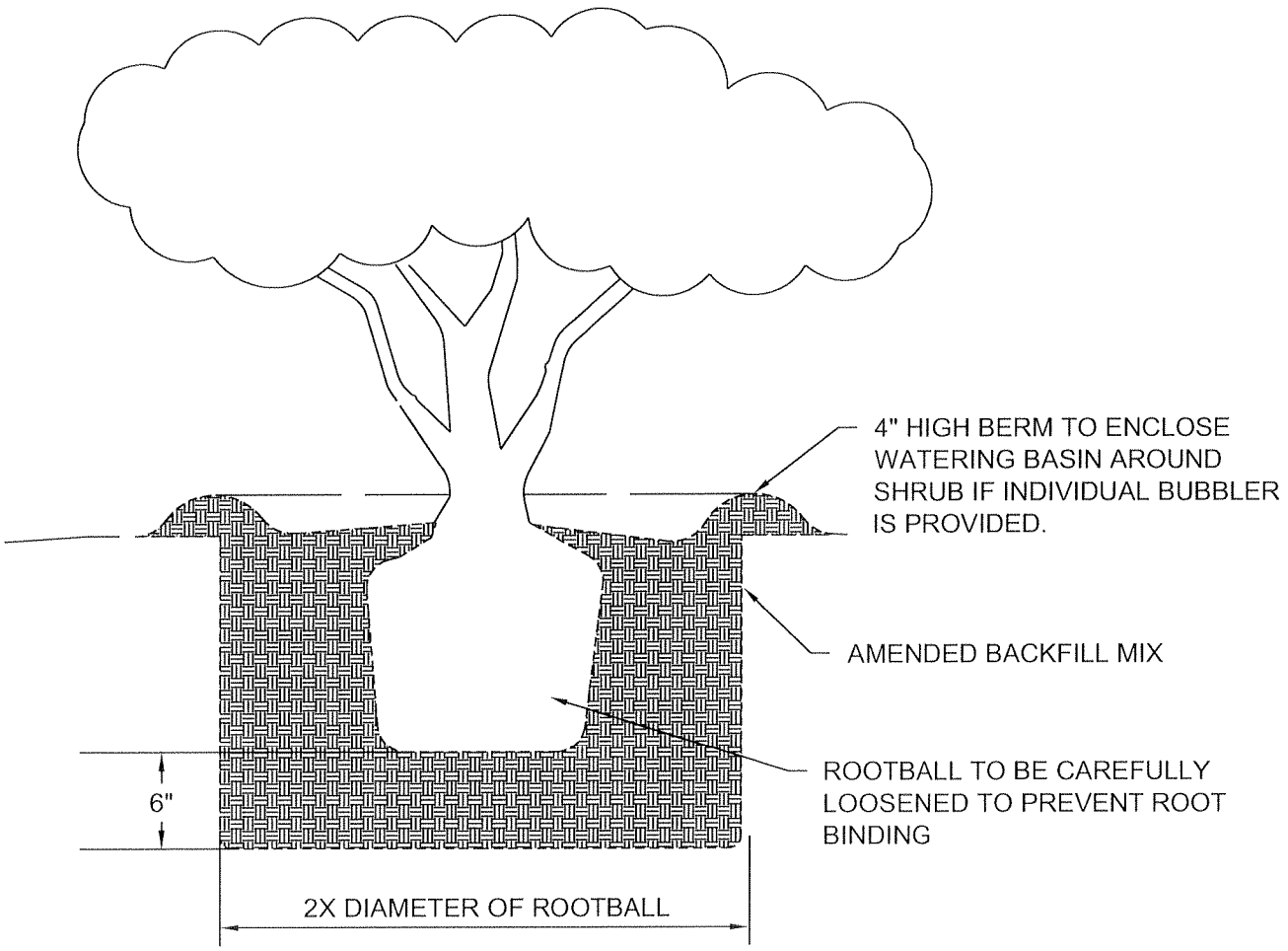

NOTES:

1. ROOT CONTROL PLANTER BOXES OR BARRIER PANELS SHALL BE REQUIRED WHERE SHRUB IS 10 FEET OR LESS FROM EXISTING OR FUTURE SIDEWALK OR CURB. EWING STANDARD PLANTER, UNIVERSAL PLANTER OR CENTURY RC 24 OR EQUAL MAY BE USED. LENGTH OF BARRIER = 6' CENTERED ON SHRUB.
2. SHRUBS SHALL BE PROVIDED WITH AUTOMATIC IRRIGATION SYSTEMS (INDIVIDUAL BUBBLERS WITH WATERING BASIN).

8010	SHRUB PLANTING	REGISTERED PROFESSIONAL ENGINEER GREG W. CUNNINGHAM No. C041985 EXP. 03/31/10 CIVIL STATE OF CALIFORNIA APPROVED: NOVEMBER 2009	CITY OF DIXON ENGINEERING STANDARD DETAIL DIXON CALIFORNIA

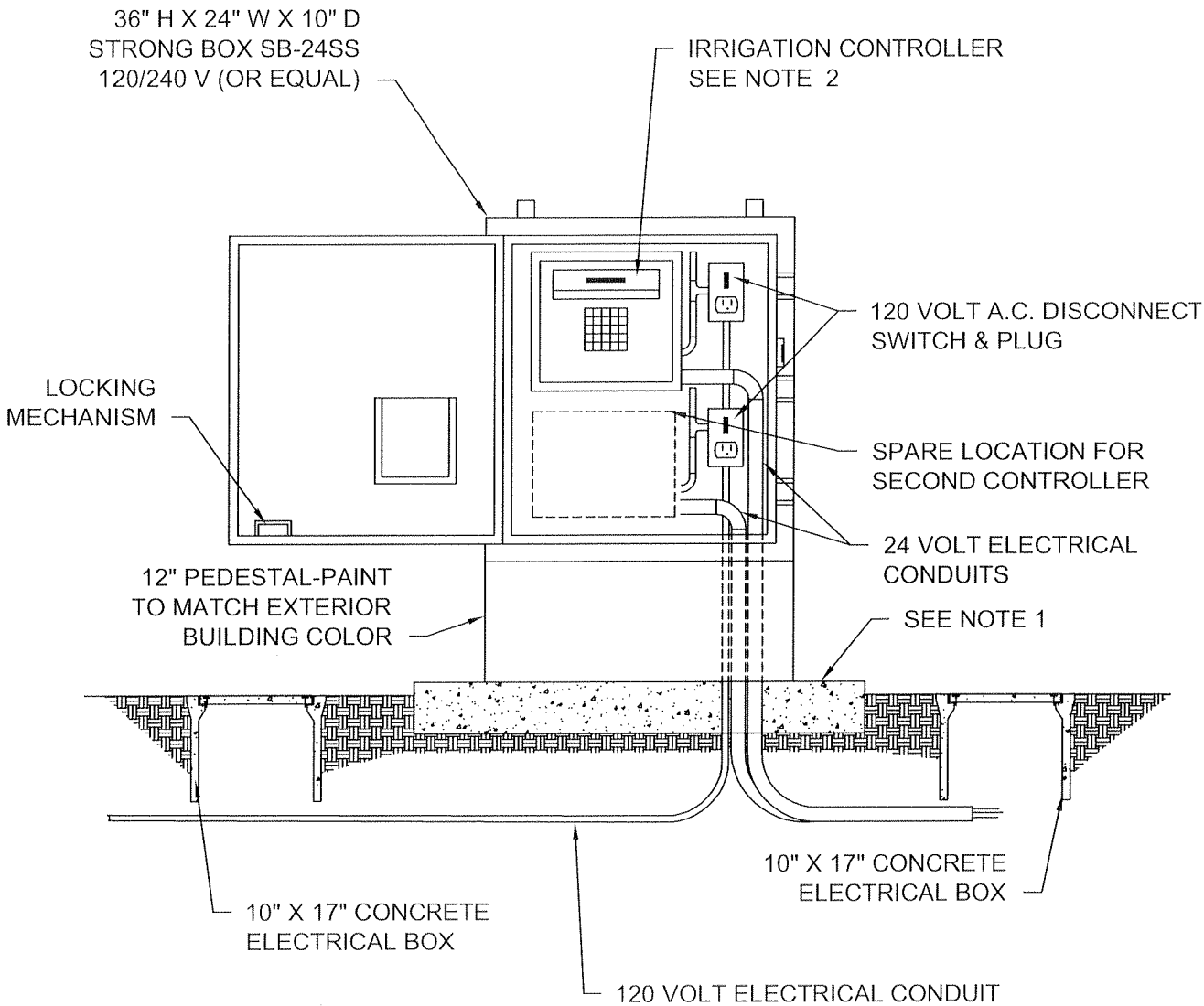

NOTES:

1. 8" THICK CONCRETE SLAB EXTENDING 4" BEYOND SIDES AND BACK, AND 24" IN FRONT. SET TOP TO 2" ABOVE FINISH GRADE IN GROUND COVER AND 1" ABOVE FINISH GRADE IN TURF.
2. CONTROLLER TO BE SPECIFIED EVOLUTION OR EAGLE RAINMASTER. MAXIMUM (1) CONTROLLER PER BOX.
3. PROVIDE 2 COPIES OF LAMINATED SCHEMATIC MAP OF STATIONS IN CONTROLLER BOX.

DIXON CALIFORNIA — CITY OF DIXON ENGINEERING STANDARD DETAIL	REGISTERED PROFESSIONAL ENGINEER — JAMES W. CUNNINGHAM — No. C031985 — EXP. 03/31/10 — CIVIL — STATE OF CALIFORNIA APPROVED: NOVEMBER 2009	IRRIGATION CONTROLLER	8020

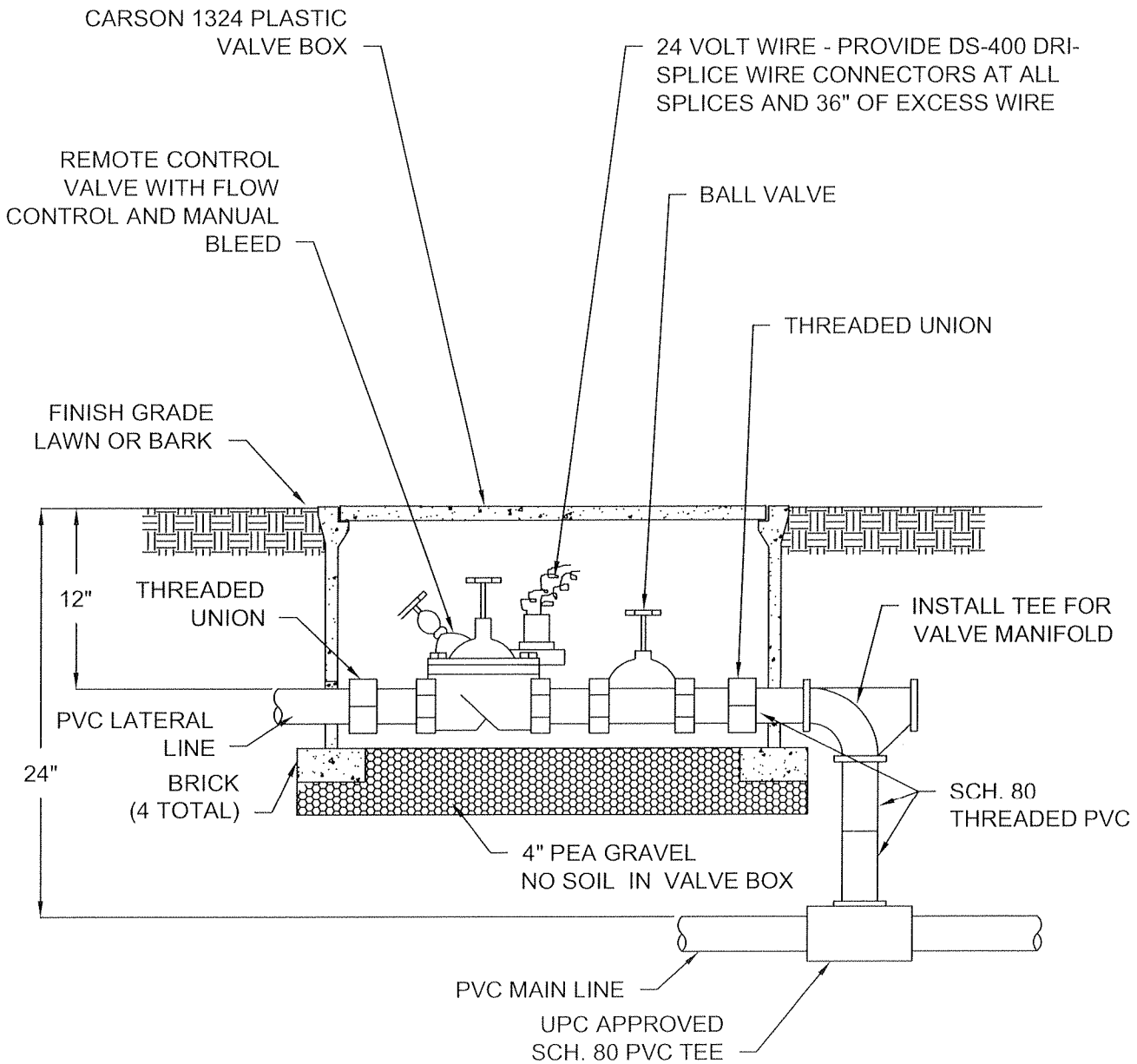

NOTES:

1. WHEN PLASTIC VALVES ARE USED, THE CARSON VALVE BOX SHALL HAVE AN EMS DEVICE IN THE COVER TO FACILITATE DETECTION BY A METAL DETECTOR.
2. ONLY ONE (1) REMOTE CONTROL VALVE PER BOX - NO EXCEPTIONS.
3. PROVIDE DS-400 DRI-SPLICE WIRE CONNECTORS AT ALL SPLICES.
4. ALL WIRES SHALL BE LABELED OR TAGGED.

8030	REMOTE CONTROL AND BALL VALVE COMBINATION	REGISTERED PROFESSIONAL ENGINEER JEFFREY W. CUNNINGHAM No. C081983 EXP. 03/31/10 CIVIL STATE OF CALIFORNIA APPROVED: NOVEMBER 2009	CITY OF DIXON ENGINEERING STANDARD DETAIL DIXON CALIFORNIA

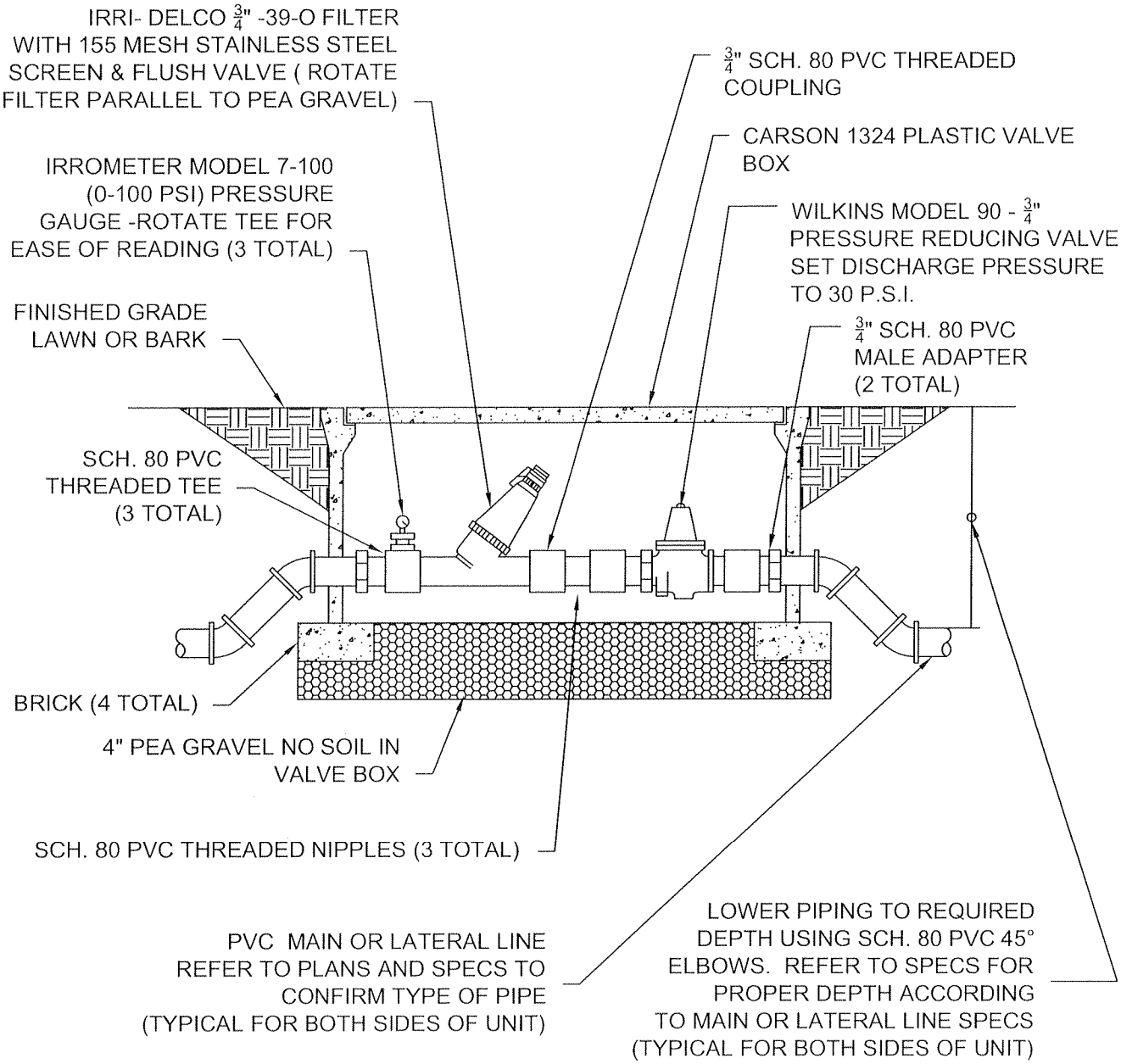

NOTES:

1. PRESSURE GAUGES ON EITHER SIDE OF FILTER ARE TO INDICATE WHEN FILTER IS CLOGGED AND NEEDS CLEANING.
2. ONE MANIFOLD UNIT MAY BE USED UPSTREAM OF A GROUP OF DRIP VALVES, IF EQUIPMENT IS PRESSURE RATED.
3. PLACE MANIFOLD UNIT DOWNSTREAM OF SINGLE DRIP VALVE.
4. EMITTER MANIFOLD UNITS TO BE INSTALLED IN VALVE BOX AT GRADE FOR EASE OF FILTER CLEANING.

DIXON CALIFORNIA CITY OF DIXON ENGINEERING STANDARD DETAIL	REGISTERED PROFESSIONAL ENGINEER GEORGE W. CUNNINGHAM No. C041985 EXP. 03/31/10 CIVIL STATE OF CALIFORNIA APPROVED: NOVEMBER 2009	IRRIGATION DRIP FILTERING SYSTEM	8040

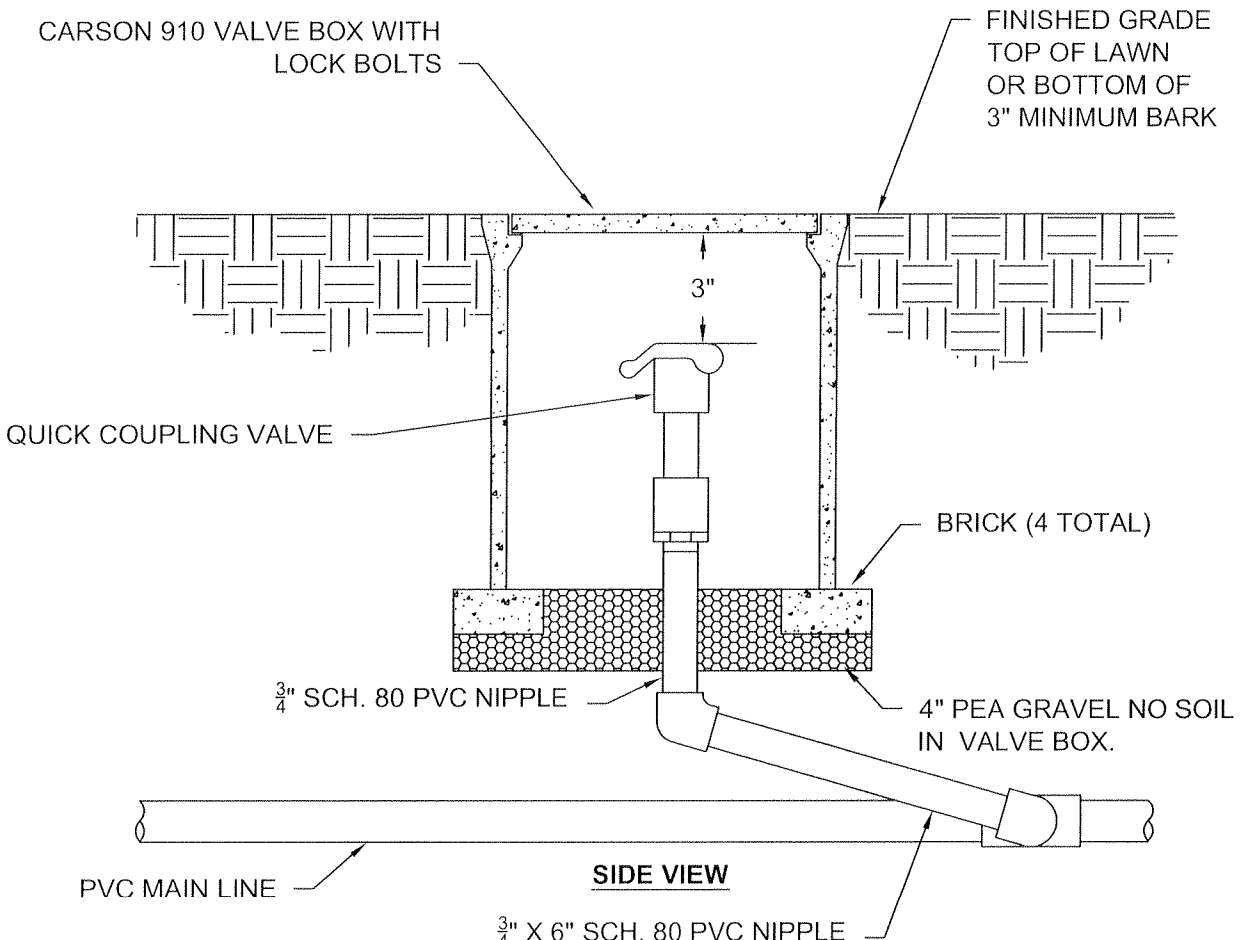

SIDE VIEW

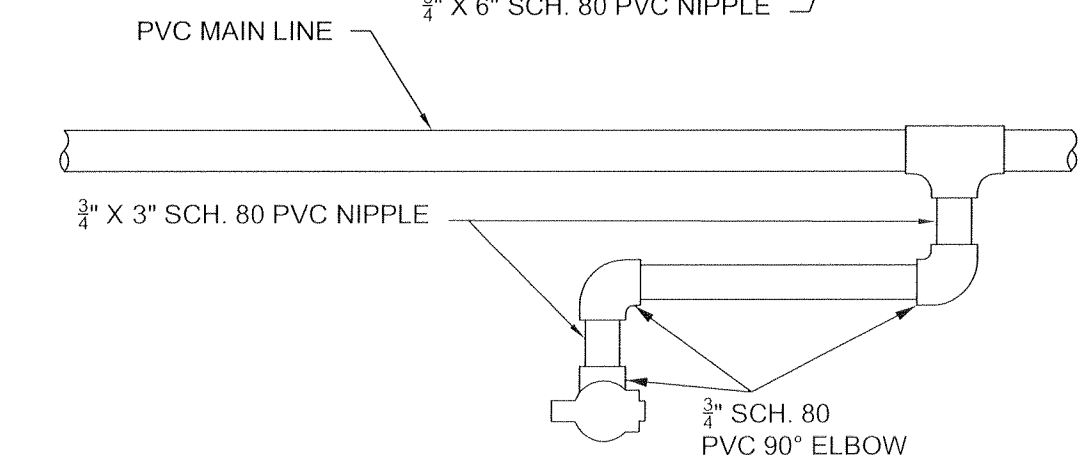

TOP VIEW

8050	QUICK COUPLER	REGISTERED PROFESSIONAL ENGINEER C. W. CUNNINGHAM No. C041985 EXP. 03/31/10 CIVIL STATE OF CALIFORNIA APPROVED: NOVEMBER 2009	CITY OF DIXON ENGINEERING STANDARD DETAIL DIXON CALIFORNIA

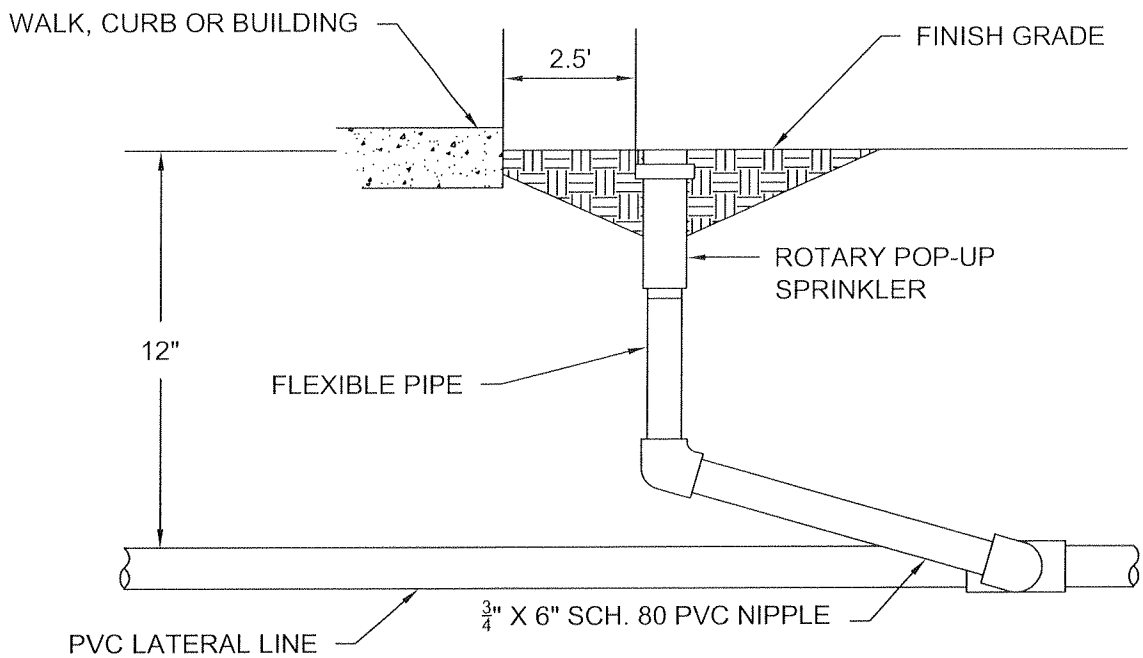

SIDE VIEW

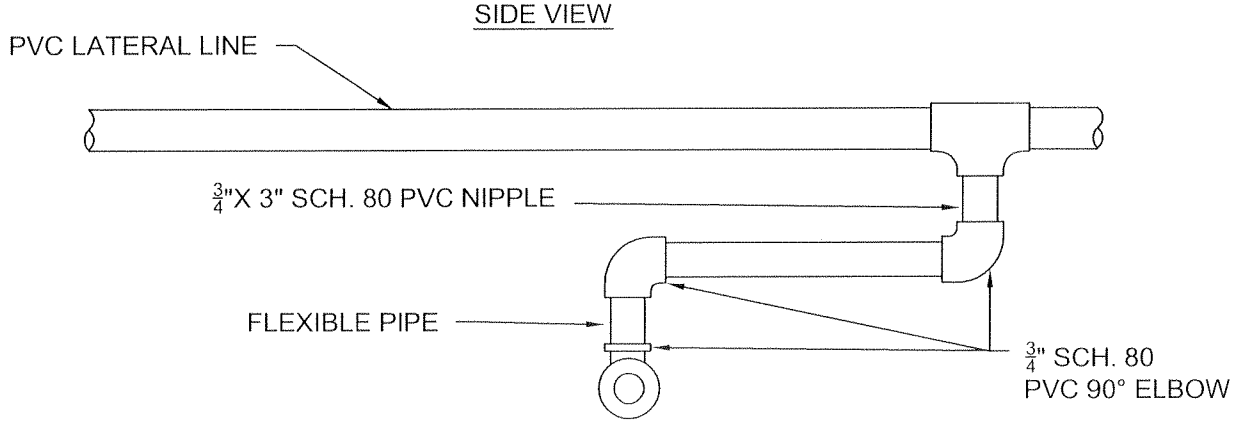

TOP VIEW

NOTES:

1. SPRINKLER SHALL HAVE INTEGRAL CHECK VALVE TO PREVENT LOW HEAD DRAINAGE.
2. SET SPRINKLERS 2" ABOVE FINISH GRADE AT TIME OF INSTALLATION- LOWER TO FINISH GRADE WHEN TURF IS WELL ESTABLISHED.

CITY OF DIXON ENGINEERING STANDARD DETAIL	REGISTERED PROFESSIONAL ENGINEER JACK W. CUNNINGHAM No. C041985 EXP. 03/31/10 CIVIL STATE OF CALIFORNIA APPROVED: NOVEMBER 2009	TYPICAL SPRAY HEAD	8060

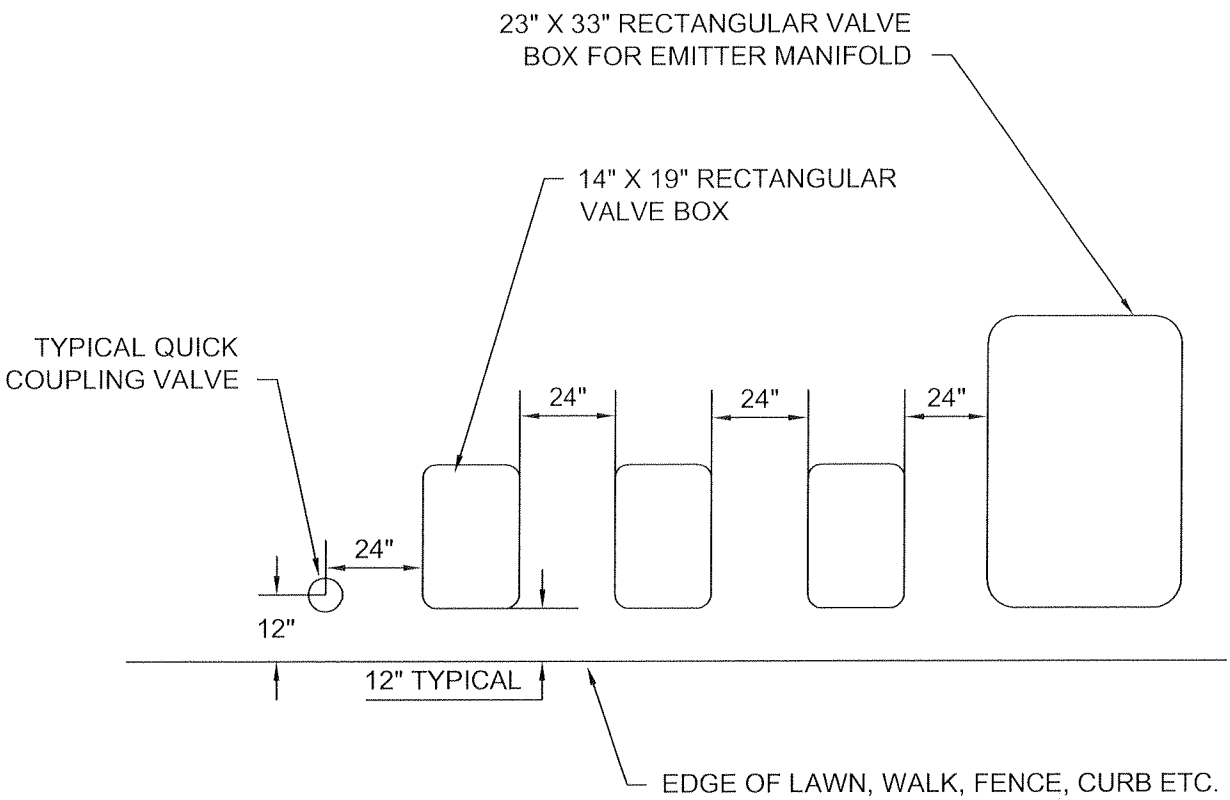

NOTES:

1. CENTER VALVE BOX OVER REMOTE CONTROL VALVE TO FACILITATE SERVICING VALVE.
2. SET PCV AND VALVE BOX ASSEMBLY IN GROUND COVER / SHRUB AREA WHERE POSSIBLE. INSTALL IN LAWN ONLY IF GROUND COVER DOES NOT EXIST ADJACENT TO LAWN.
3. SET BOXES PARALLEL TO EACH OTHER AND PERPENDICULAR TO EDGE.
4. AVOID HEAVILY COMPACTED SOIL AROUND VALVE BOXES TO PREVENT COLLAPSE AND DEFORMATION OF VALVE BOX SIDES.
5. STAMP LIDS AND TAG VALVES.

8070	IRRIGATION BOX ARRANGEMENT	REGISTERED PROFESSIONAL ENGINEER W. CUNNINGHAM No.C031083 EXP. 03/31/10 CIVIL STATE OF CALIFORNIA APPROVED: NOVEMBER 2009	CITY OF DIXON ENGINEERING STANDARD DETAIL

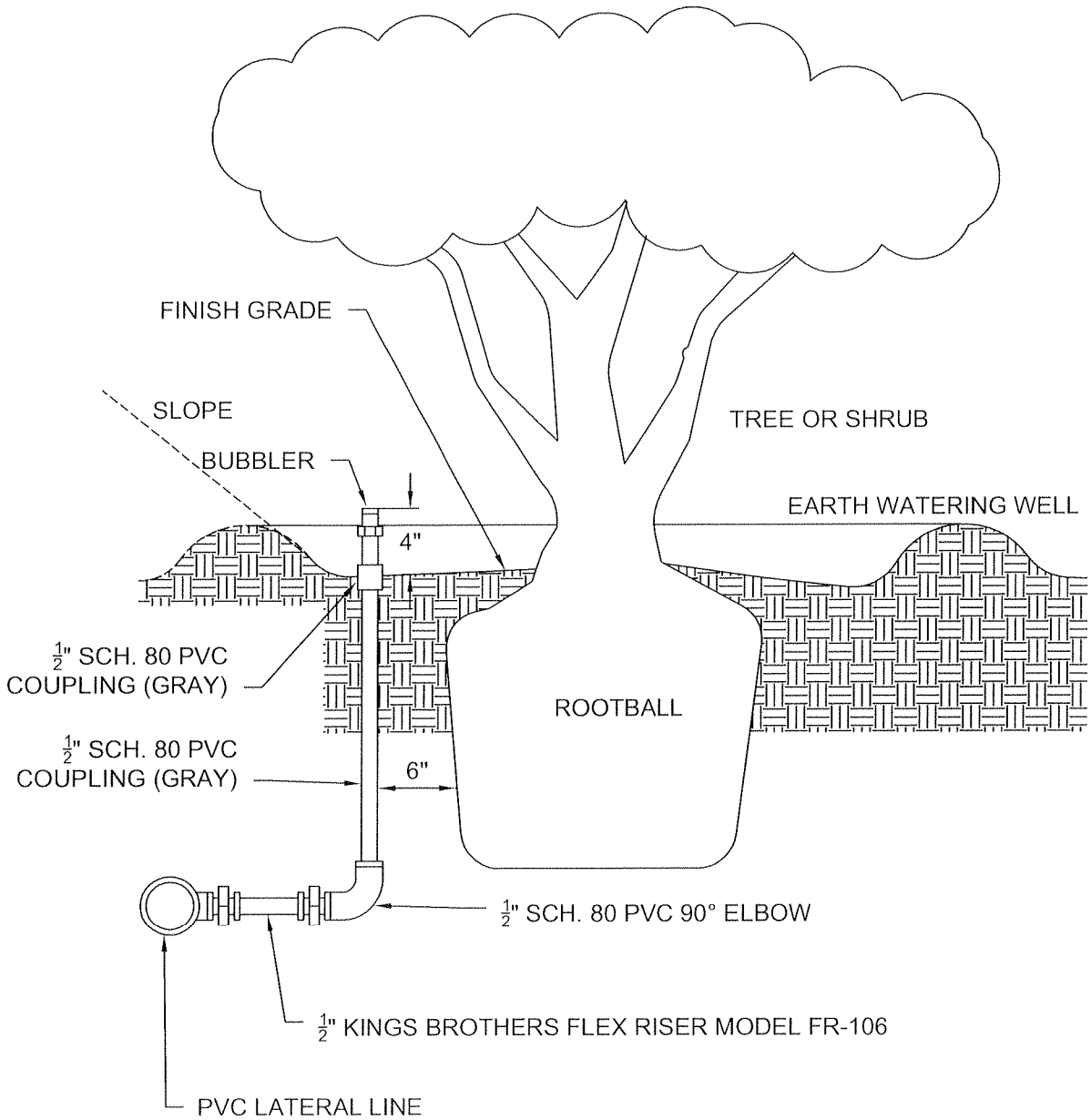

NOTES:

1. FOR BUBBLERS AT TREES OR SHRUBS IN GROUND COVER AREAS AND ON SLOPES.
2. INSTALL ONE OR TWO BUBBLERS, ON OPPOSITE SIDES OF THE ROOT BALL, AS PER IRRIGATION DESIGN.
3. INSTALL ALL BUBBLERS ON UPHILL SIDE OF PLANT.

DIXON CALIFORNIA CITY OF DIXON ENGINEERING STANDARD DETAIL	REGISTERED PROFESSIONAL ENGINEER JAMES W. CUNNINGHAM No.C041989 EXP. 03/31/10 CIVIL STATE OF CALIFORNIA APPROVED: NOVEMBER 2009	TYPICAL BUBBLER	8080

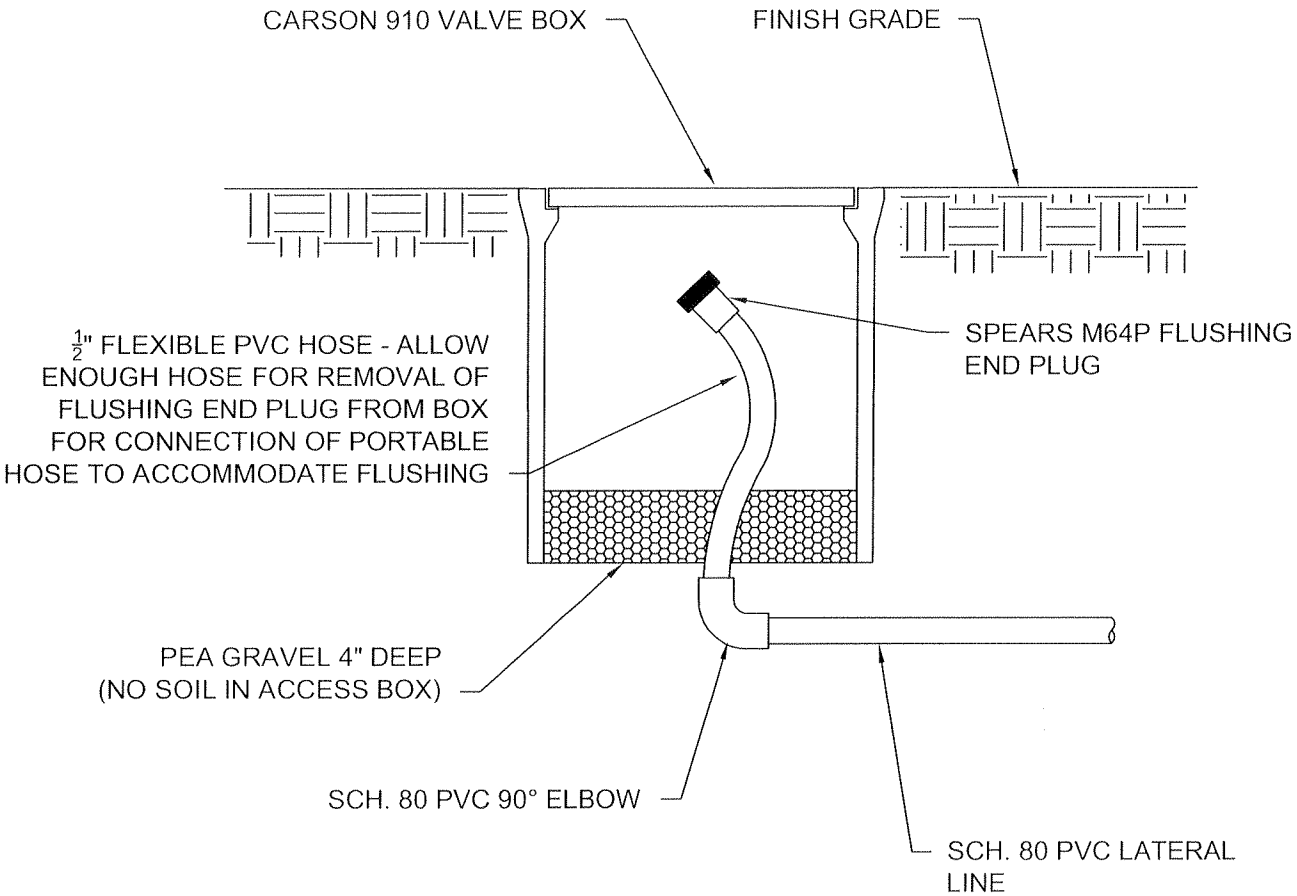

NOTES:

1. THIS FLUSHING END PLUG IS TYPICAL OF ALL LATERAL ENDS IN DRIP SYSTEM.

8090	DRIP IRRIGATION FLUSH PLUG	REGISTERED PROFESSIONAL ENGINEER W. CUNNINGHAM No. C061983 EXP. 03/31/10 CIVIL STATE OF CALIFORNIA APPROVED: NOVEMBER 2009	CITY OF DIXON ENGINEERING STANDARD DETAIL DIXON CALIFORNIA

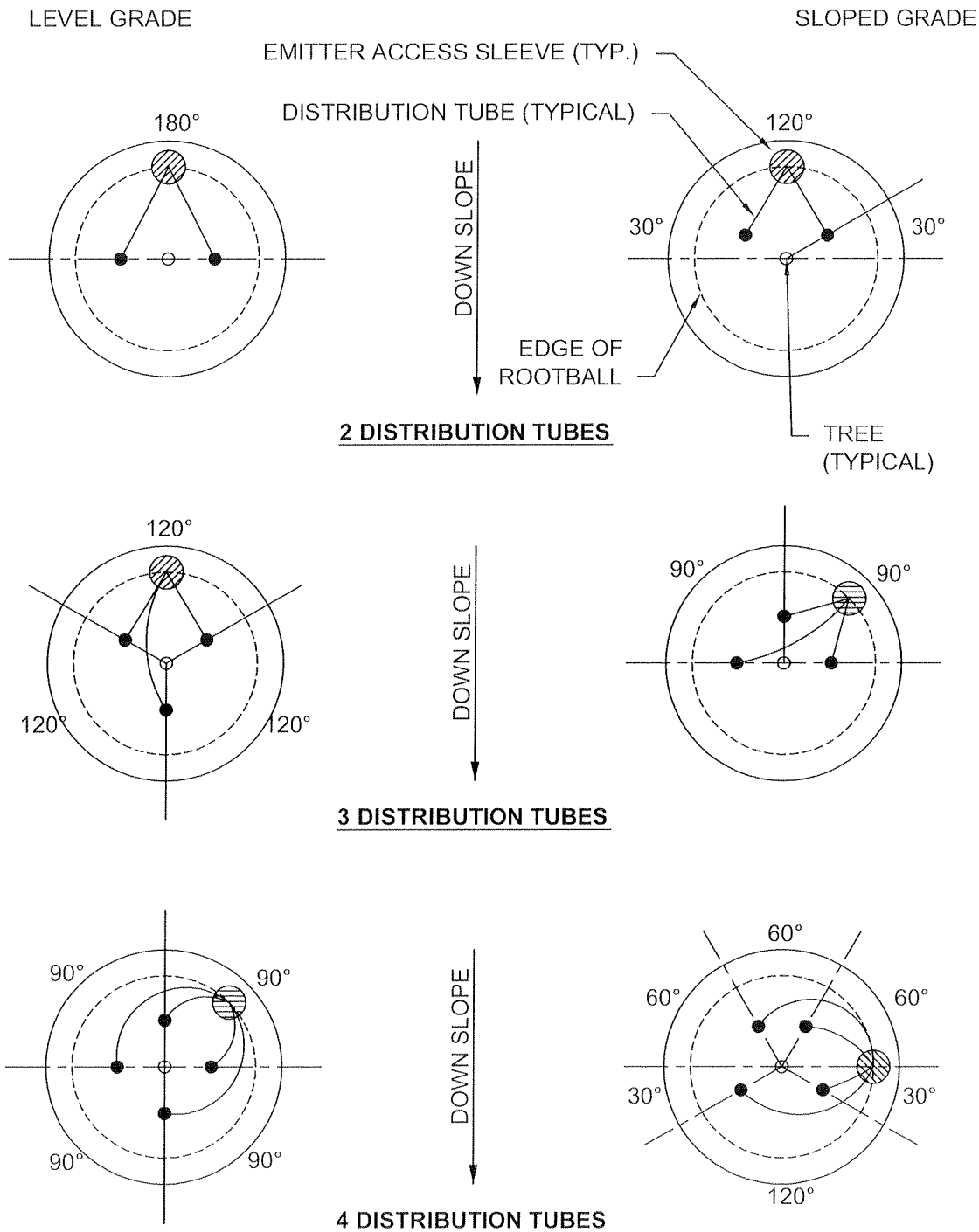

NOTES:

1. STAKING FOR EMISSION TUBES SHALL BE PER THE MANUFACTURER'S RECOMMENDATIONS.

DIXON CALIFORNIA	CITY OF DIXON ENGINEERING STANDARD DETAIL	REGISTERED PROFESSIONAL ENGINEER JAMES W. CUNNINGHAM No. C041985 EXP. 03/31/10 CIVIL STATE OF CALIFORNIA APPROVED: NOVEMBER 2009	DRIP EMMITTER ARRANGEMENT	8100

STRIP WIRES APPROXIMATELY $\frac{5}{8}$" FROM END

INSERT WIRES THROUGH HOLES IN BASE OF BODY

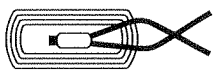

TWIST STRIPPED WIRES TOGETHER AND APPLY CRIMP SLEEVE WITH AN INDENT TYPE CRIMPING TOOL. PUSH WIRES BACK INTO BODY. INVERT BODY AND INSERT PLUG INTO BODY UNTIL IT SNAPS TIGHT.

NOTES:

1. ONE CONNECTOR HANDLES #10, #12 & #14 AWG WIRE.
2. WIRE CONNECTORS WILL ACCEPT THREE WIRE OR TWO WIRE CONNECTIONS.

8110	UNDERGROUND WIRE SPLICE	REGISTERED PROFESSIONAL ENGINEER W. CUNNINGHAM No.C041083 EXP. 03/31/10 CIVIL STATE OF CALIFORNIA APPROVED: NOVEMBER 2009	CITY OF DIXON ENGINEERING STANDARD DETAIL DIXON CALIFORNIA

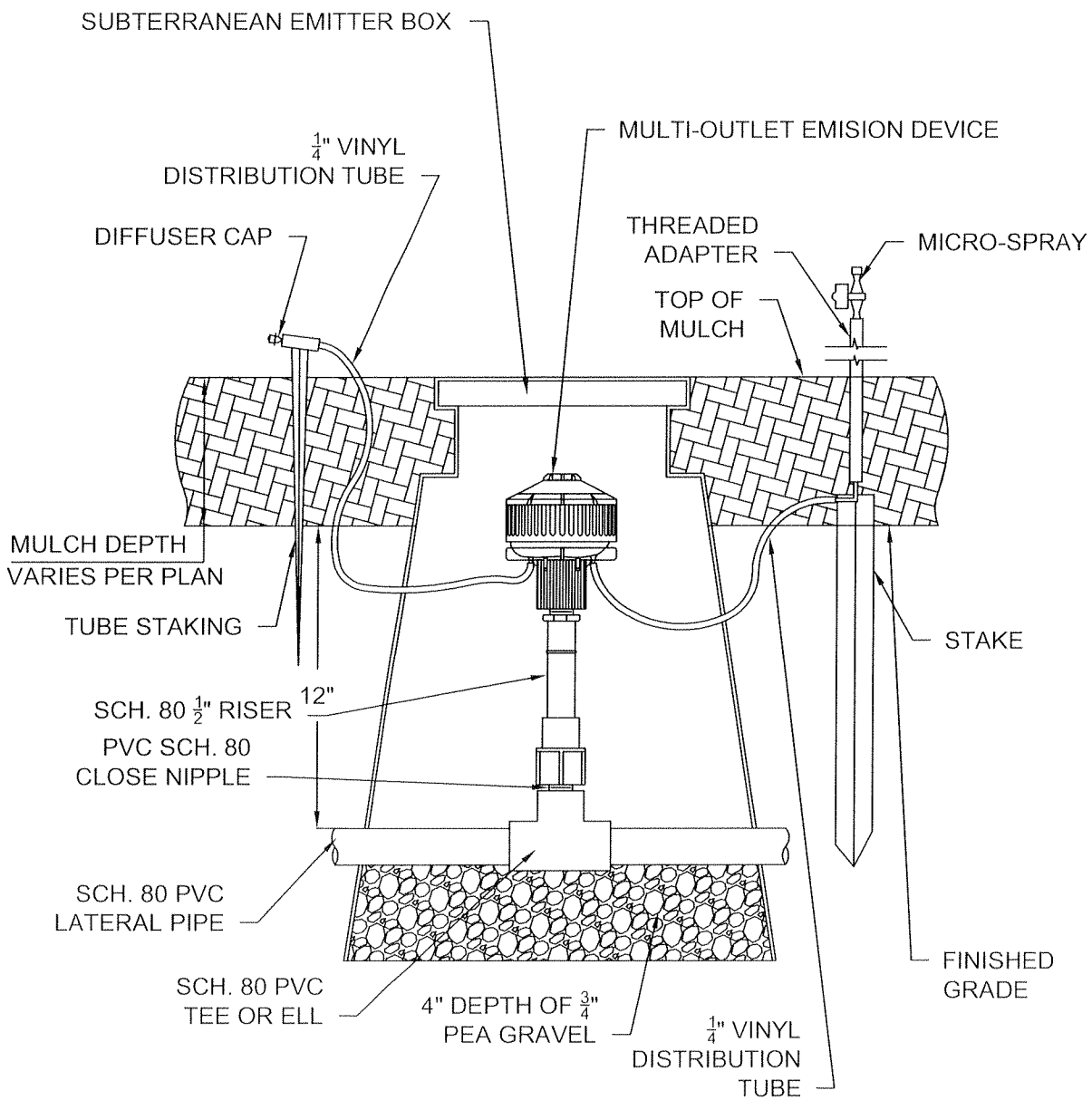

DIXON CALIFORNIA CITY OF DIXON ENGINEERING STANDARD DETAIL	REGISTERED PROFESSIONAL ENGINEER JAMES W. CUNNINGHAM No. C041983 EXP. 03/31/10 CIVIL STATE OF CALIFORNIA APPROVED: NOVEMBER 2009	DRIP IRRIGATION MULTI-OUTLET EMITTER	8120

This Page Intentionally
Left Blank